U. K.

Remeha Gas 110 Eco

EN

Gas fired condensing boiler

Gas 110 Eco 115 / 65

Installation and Service Manual

300014883-001-F

remeha

Declaration of conformity CE

Manufacturer	Broag - Remeha Ltd Remeha House Molly Millars Lane RG41 2QP WOKINGHAM, Berks ✆ +44 118 9783434 +44 118 9786977
Issued by	See end of notice

We hereby certify that the series of appliances specified hereinafter is in compliance with the standard model described in the EC declaration of compliance, and that it is manufactured and marketed in compliance with the requirements and standards of the following European Directives.

Product type	Gas fired condensing boiler
Formats	Gas 110 Eco 115 / 65
Standards and rules	- 90/396/EEC Gas Appliance Directive Reference Standards: EN 437; EN 483; EN 625; EN 677 - 2006/95/EC Low Voltage Directive Reference Standard: EN 60.335.1 - 2004/108/EC Electromagnetic Compatibility Directive Generic standards: EN1000-6-3 ; EN 61000-6-1 - 92/42/EEC Efficiency Directive **** CE
Inspecting organisation	Gastec

Values

	NOx (mg/kWh) dry 0%O_2	CO (mg/kWh)
Gas 110 Eco 65	32	21 - DIN 4702 Teil 8
Gas 110 Eco 115	35	31 - EN 297A3

Date	
Signature	Technical Director Mr Bertrand SCHAFF

Contents

1 Used symbols 5

2 Important recommendations 5

3 Description 6

3.1 General 6
3.2 Homologations 6
3.2.1 General instructions 6
3.2.2 Gas categories 6
3.3 Main parts 7
3.4 Technical characteristics 9
3.4.1 Boiler 9
3.4.2 Control panel 9
3.5 Technical data 10
3.6 Main dimensions 11
3.6.1 Boiler self-standing 11
3.6.2 Boiler installed 12
3.7 Hydraulic specifications 13

4 Control and safety equipment 14

4.1 Control panel 14
4.1.1 General 14
4.1.2 Layout of the control panel 14
4.1.3 Combined key functions (in operating mode only) 15
4.1.4 Display of values with more than two digits 15
4.2 Flow diagram control system 16
4.3 Operating mode (X) 17
4.4 Shut-off mode (b X X) 18
4.5 Setting mode user level (X) 18
4.5.1 Flow temperature set point (1) 19
4.5.2 Pump run on time HTG (2) 19
4.5.3 DHW temperature set-point (3) 20
4.5.4 Boiler control setting (A) 20
4.6 Setting mode service level (X 0 0) 21
4.6.1 Flow temperature set point during forced part load (4) 22
4.6.2 High limit thermostat (5) 22
4.6.3 Fan speed at full load HTG (6) 22
4.6.4 Fan speed at part load (HTG and DHW - 7) 22
4.6.5 Starting point modulation (8) 22
4.6.6 Interface selection (9) 22
4.6.7 DHW cut-in temperature (b) 22
4.6.8 Fan Speed at DHW full load (C) 23
4.6.9 Forced part load time after start (HTG only - G) 23
4.6.10 DHW control stop set point (I) 23
4.6.11 DHW control option (J) 23
4.6.12 HTG cut in temp (n) 23
4.6.13 Boiler type (P) 23
4.6.14 Maximum delay time (U) 23
4.6.15 Start and end point analog signal (9 and y) 23
4.7 Read-out mode (X 0 0) 24
4.8 Fan speed mode (n 0 0) 24
4.9 Failure mode (X 0 0) 24

5 Installation 25

5.1 Statutory terms and conditions of installation and maintenance 25

5.2 Important comments on the treatment of the heating circuit . . . 26
5.3 Water discharge connection . . . 28
5.4 Room sealed installations . . . 28
5.5 Checking the gas inlet . . . 28
5.6 Reversal of the direction the control panel access door opens . . . 29
5.7 Levelling . . . 31
5.8 Handling the boiler . . . 31

6 Connecting the flue . . . 32

6.1 Flue pipe connections . . . 32
6.1.1 Classification . . . 33
6.1.2 Lengths of the air/flue gas pipes . . . 34
6.2 Electrical connection . . . 35

7 Starting or restarting after a prolonged shutdown . . . 37

7.1 Filling the system . . . 37
7.2 Check points before commissioning . . . 37
7.2.1 Checking the gas supply pressure . . . 37
7.2.2 Setting the burner . . . 38
7.2.3 Programming boiler control . . . 41
7.2.4 Instruct the user of the boiler . . . 41
7.2.5 Shut-down . . . 41

8 Fault-finding . . . 42

8.1 General (all installations) . . . 42
8.2 Fault codes . . . 43

9 Adapting to another gas . . . 45

9.1 Switching from Natural Gas to Propane . . . 45
9.2 Gas type . . . 46

10 Maintenance . . . 47

10.1 General . . . 47
10.2 Inspection . . . 47
10.2.1 Checking the combustion in the boiler . . . 47
10.2.2 Setting the ignition electrode . . . 48
10.2.3 Checking the hydraulic pressure . . . 48
10.2.4 Checking the ionization current . . . 48
10.3 Cleaning and maintenance . . . 49
10.4 Maintenance of the air/flue gas drain connection flues . . . 52
10.5 Temperature sensor . . . 52

11 Schematic diagrams . . . 53

12 Spare parts - Gas 110 Eco 115 / 65 . . . 55

1 Used symbols

Caution danger
Risk of injury and damage to equipment. Attention must be paid to the warnings on safety of persons and equipment

Important information
Information must be kept in mind to maintain comfort

Reference
Refer to another manual or other pages in this instruction manual

DHW: Domestic hot water

2 Important recommendations

For a proper operating of the boiler, follow carefully the instructions.

Any intervention on the appliance and heating equipment must be carried out by a qualified engineer.

The manufacturer is not liable for any improper use of the appliance or failure to maintain or install the unit correctly (the user shall take care to ensure that the system is installed by a qualified engineer).

Work on electrical equipment must be carried out by a qualified professional in compliance with the prevailing regulations.

Check that the appliance is properly set for the type of gas used.

Keep to the polarity shown on the terminals: phase (L), neutral (N) and earth ⏚.

Check the seal on the gas and water pipe connections.

We shall not accept any responsibility for any damage and disturbance arising from not following these instructions.

Installation must be carried out in accordance with the prevailing regulations, the codes of practice and the recommendations in these instructions with the relevant certification ie: ACS, IEE regulations, etc.

The first start-up is to be performed by your installation/ commissioning engineer.

Only original spare parts must be used.

Any work on the boiler unit is authorised only if carried out by a qualified engineer.

Before commissioning, the factory settings of the appliance must be compared with the local energy supply conditions. If the settings have to be modified, this must be carried out by a qualified professional.

Condensing boilers require a flue gas evacuation system or a fresh air inlet specially adapted to the method of operation. Its execution depends on the place of installation and the building.

Compliance with a minimum distance between the flue gas evacuation system in forced flue mode or the boiler with combustible substances must comply with current regulations. At nominal output, the temperature of the components does not exceed 85 °C.

Work on electrical equipment must be carried out by a qualified professional in compliance with the prevailing legislation.

The installation and maintenance of the boiler must be done by a qualified professional in compliance with the prevailing local and national regulations.

3 Description

3.1 General

Gas 110 Eco 115 / 65 boilers are floor standing gas-fired condensing boilers fitted with an "Open Therm" control interface which enable direct weather compensation using Remeha single and multi boilers controls or the customer can choose to use external control options supplied by others without affecting boiler performance.

They are designed for closed circuit hot water boiler rooms with a maximum operating temperature of 90°C. However, open vented systems can be accommodated

See chapter 5.2 "Important comments on the treatment of the heating circuit".

Installation is recommended on low temperature heating installations (Underfloor heating, radiators, ...).

3.2 Homologations

3.2.1 General instructions

Boiler	Gas 110 Eco 65 / Gas 110 Eco 115
No. CE	CE-0063BS3826
Type	B_{23} - C_{13} - C_{33} - C_{43} - C_{53} - C_{63} - C_{83}
Flue gas evacuation	Chimney / Forced flue
Ignition	Automatic
Gas	Natural gas / Propane

3.2.2 Gas categories

	Category	Type of gas used	Supply pressure	
			Minimum	Maximum
Gas 110 Eco 65 Gas 110 Eco 115	II_{2H3P}	Natural gas	17 mbar	30 mbar
		Propane	37 mbar	50 mbar

3.3 Main parts

- Gas 110 Eco 65

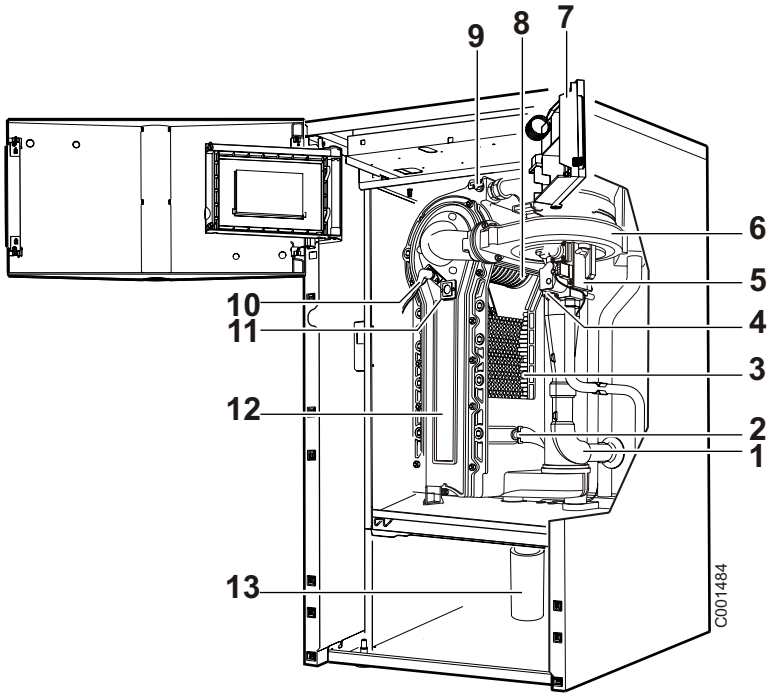

1	Fan air inlet
2	Return sensor
3	Heating body
4	Venturi premix
5	Combined gas valve unit
6	Fan
7	Control panel
8	Burner
9	Flow temperature sensor
10	Ignition electrode + Ionization electrode
11	Flame inspection window
12	Inspection hatch
13	Siphon

- Gas 110 Eco 115

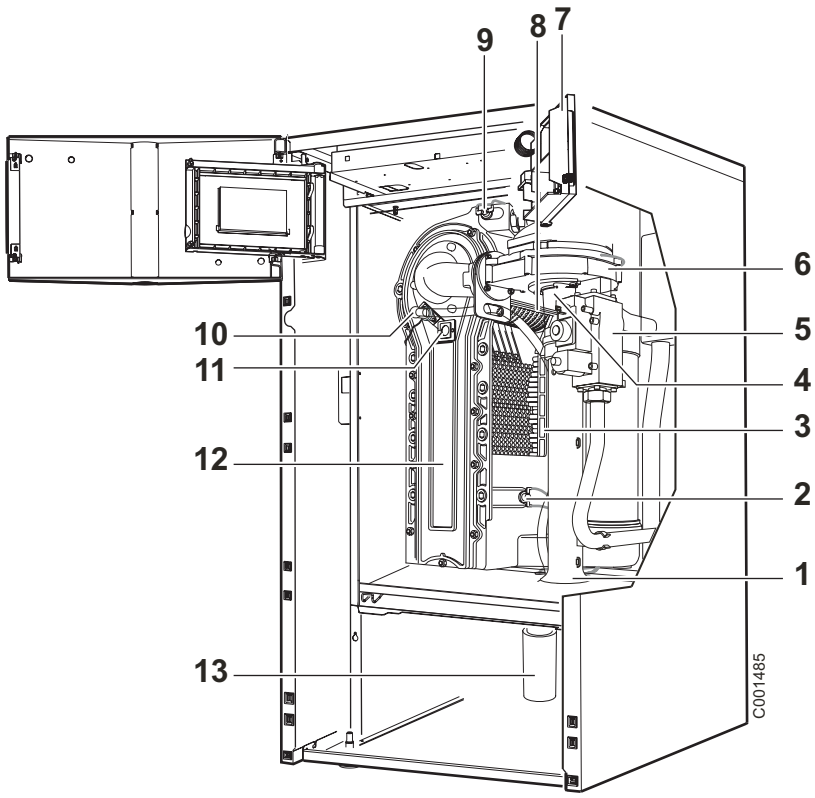

1	Fan air inlet
2	Return sensor
3	Heating body
4	Venturi premix
5	Combined gas valve unit
6	Fan
7	Control panel
8	Burner
9	Flow temperature sensor
10	Ignition electrode + Ionization electrode
11	Flame inspection window
12	Inspection hatch
13	Siphon

3.4 Technical characteristics

3.4.1 Boiler

- For operation on Natural Gas or Propane (See "Switching from Natural Gas to Propane")
- The boiler is preset in the factory to operate on natural gas G20, 20 mbar (minimum 17 mbar)
- The boiler is suitable for room sealed or open flue applications
- Monoblock heat exchanger in cast aluminium/silicium
- Cylindrical premix burner covered in metal fibres
- Centrifugal fan with combustive air intake silencer for a low noise level
- Compact gas line with zero pressure regulator, two valves and filter
- Water condensation siphon with run-off pipe
- Automatic air vent
- Mechanical manometer
- Soundproofed boiler body
- A documentation pack.

3.4.2 Control panel

Please read the following installation and commissioning instructions carefully before operating your equipment. The manufacturer shall not be liable for damage caused by the failure to comply with these instructions and the warranty shall no longer apply.

If work is carried out on the heating installation: assembly, commissioning, maintenance and repair work on the appliance and on the heating installation must be carried out only by a qualified heating professional.
Before installation : Ensure that the mains power supply is isolated.
Before commissioning : Check the seal on the gas and water pipe connections.

The connection of the control panel must be carried out by a qualified professional. For a proper operating of the boiler, follow carefully the instructions.

- Power supply : 230 V (±10%) - 50 Hz

3.5 Technical data

Gas 110 Eco		65	115
CE identification no	****	CE-0063BS3826	
Boiler specifications			
Power input - minimum/maximum G20	kW	12.2 - 62.0	17.2 - 111.0
Nominal output 50/30 °C - minimum/maximum G20	kW	13.3 - 65.0	18.4 - 113.8
Nominal output 80/60 °C - minimum/maximum G20	kW	12.0 - 61.0	16.6 - 107.0
Gas flow rate 15 °C-1013 mbar Natural gas G20 Propane	 m^3/h Kg/h	 6.6 4.8	 11.7 8.5
Efficiency 75/60 °C (DIN 4702 T8)	%	106	99
Efficiency 40/30 °C (DIN 4702 T8)	%	111	102.5
Load and water temperature efficiency (-100% Pn-Average temperature 70 °C)	%	98	96.6
Load and water temperature efficiency (-30% Pn-Return temperature 30 °C)	%	109	107.1
Stand-by losses ΔT = 30K	W	125	131
Auxiliary electrical power Pn (ex circulating pump)	W	85/30	240/40
Electrical power circulating pump	W	/	/
Mass flue gas flow rate - minimum/maximum	Kg/h	21/104	29/178
CO_2 content in flue gases - Natural gas G20 - Propane	 % %	 9.0 10.7	 9.0 10.0
Available pressure at boiler outlet	Pa	100	250
Average flue gas temperature (75/60 °C)	°C	65	67.9
Connection to a chimney (internal diameter)	mm	100/150	100/150
Emission NOx (Natural gas G20) - dry 0% O_2	mg/kWh	32	35
Emission CO (Natural gas G20) - DIN 4702 Teil 8	mg/kWh	21	31 (EN297A3)
NOx classification:		5	5
Maximum operating temperature	°C	90	90
Total admissible overpressure	bar	4	4
Water resistance (ΔT = 20K)	mbar	175	230
Water resistance (ΔT = 11K)	mbar	580	830
Nominal water flow Pn to ΔT = 20K	m^3/h	2.62	4.6
Nominal water flow Pn to ΔT = 11K	m^3/h	4.76	8.36
Water content	l	6.5	7.5
Connecting (diameter)		1" 1/4 Male	1" 1/4 Male
Condensation water pH		3-5	3-5
Condensation water run-off (diameter)	mm	25	25
Electrical specifications			
Electrical connection	V/Hz	230/50	230/50
Power consumption	W	85	240
Degree of protection	DIN40050	IP 21	IP 21
Dimensions			
Height	mm	1100	1322
Width	mm	600	600
Depth	mm	663	663
Shipping weight	kg	116	133

3.6 Main dimensions

3.6.1 Boiler self-standing

- Gas 110 Eco 115 / 65

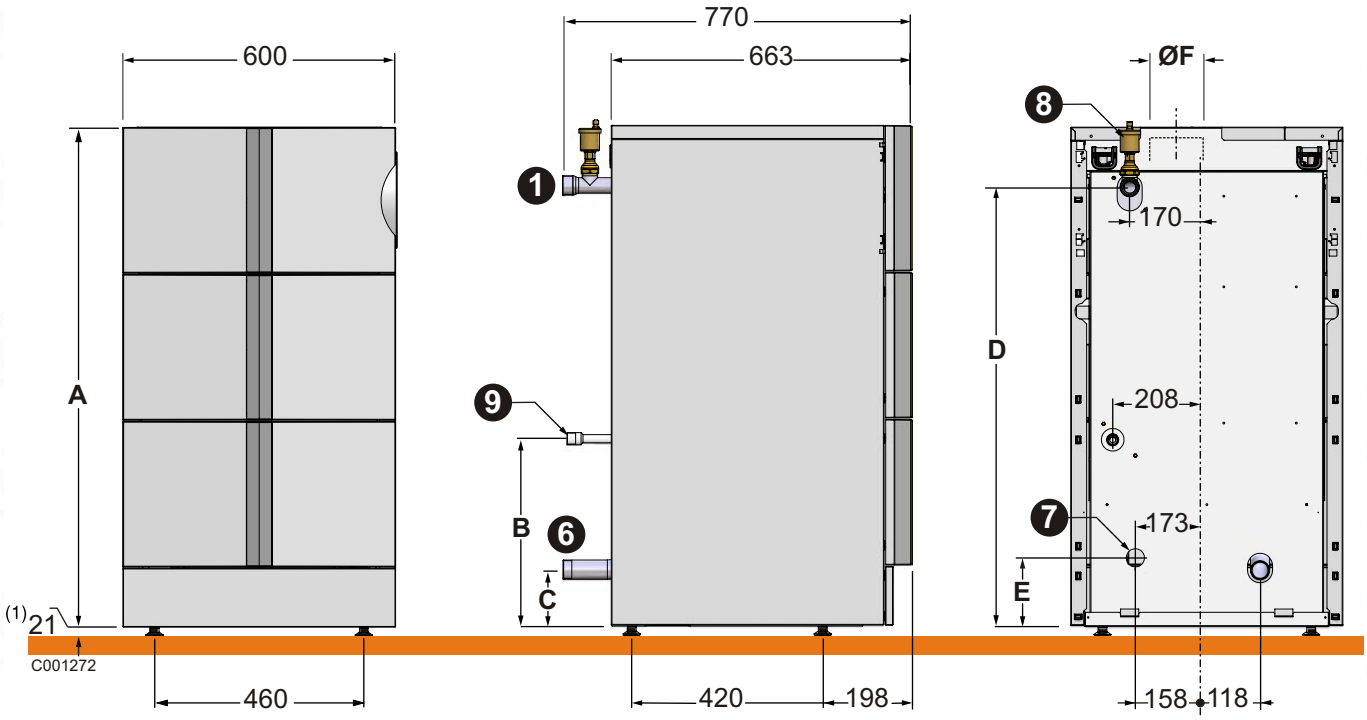

	Gas 110 Eco 115 / 65
1	Heating outlet R 1 1/4
6	Heating return R 1 1/4
7	Condensates discharge (Ø 25 mm external)
8	Automatic air vent
9	Gas inlet R 3/4
A	Gas 110 Eco 65: 1100 mm Gas 110 Eco 115: 1322 mm
B	Gas 110 Eco 65: 410 mm Gas 110 Eco 115: 632 mm
C	Gas 110 Eco 65: 124 mm Gas 110 Eco 115: 346 mm
D	Gas 110 Eco 65: 968 mm Gas 110 Eco 115: 1190 mm
E	Gas 110 Eco 65: 152 mm Gas 110 Eco 115: 374 mm
ØF	Forced flue connection Gas 110 Eco 115 / 65: Ø 100/150 mm

R = Thread

G = Exterior cylindrical threading, sealed by flat joint

(1) Basic dimension 21 mm
adjustment possible: 21 to 40 mm

3.6.2 Boiler installed

Clear space should be left around the boiler :

- 70 cm in front of the boiler
- 40 cm above the boiler
- 2.5 cm each side of the boiler (Facilitates removal of the casing)

- Gas 110 Eco 115 / 65

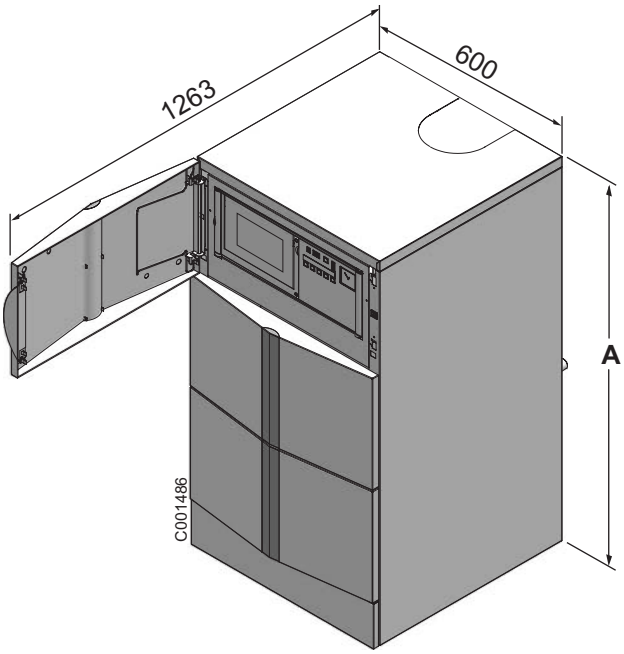

A. Gas 110 Eco 65 = 1100
Gas 110 Eco 115 = 1322

3.7 Hydraulic specifications

Depending on the flow, the following diagrams represent: :

- the manometric heights of the heating
- loss of load in the boiler.

For a fixed flow, the manometric height available at the boiler outlet is obtained by taking the difference between the manometric height of the circulator pump and the loss of load in the boiler.

For example : Gas 110 Eco 65 with UPS 25-70 130 pump:

manometric height available at 2.61 m^3/h = 4.6 mCE - 1.6 mCE = 3 mCE (i.e. 3 mbar)

2.61 m^3/h corresponds to a load of 61 kW and a Δt of 20 K

Optional 3-speed circulator pump for Gas 110 Eco 65 - UPS 25-70 130

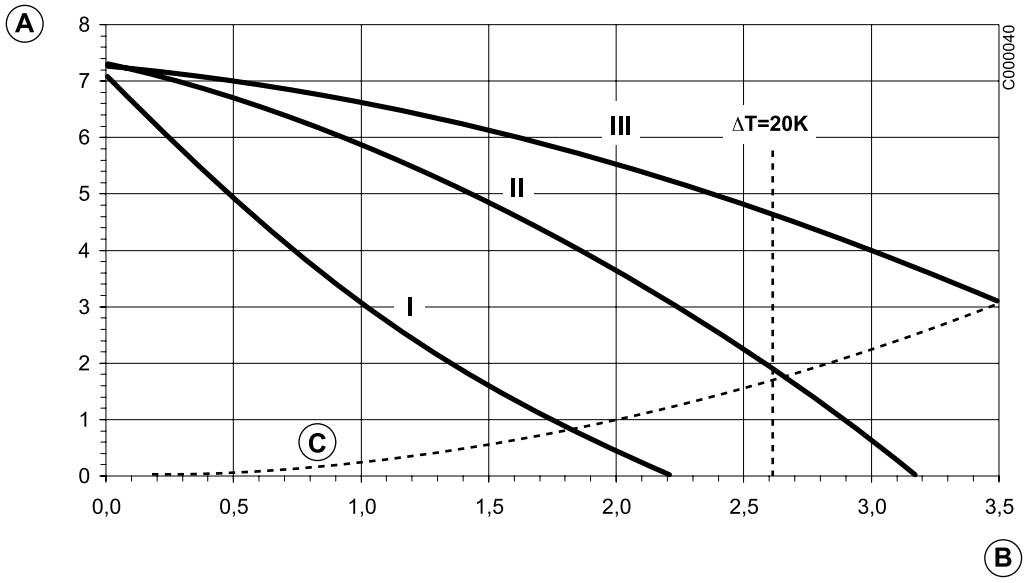

A. Rated net head (mCE)

B. Flow rate (m^3/h)

C. Loss of load Gas 110 Eco 65

Optional 3-speed circulator pump for Gas 110 Eco 115 - UPS 25-80 130

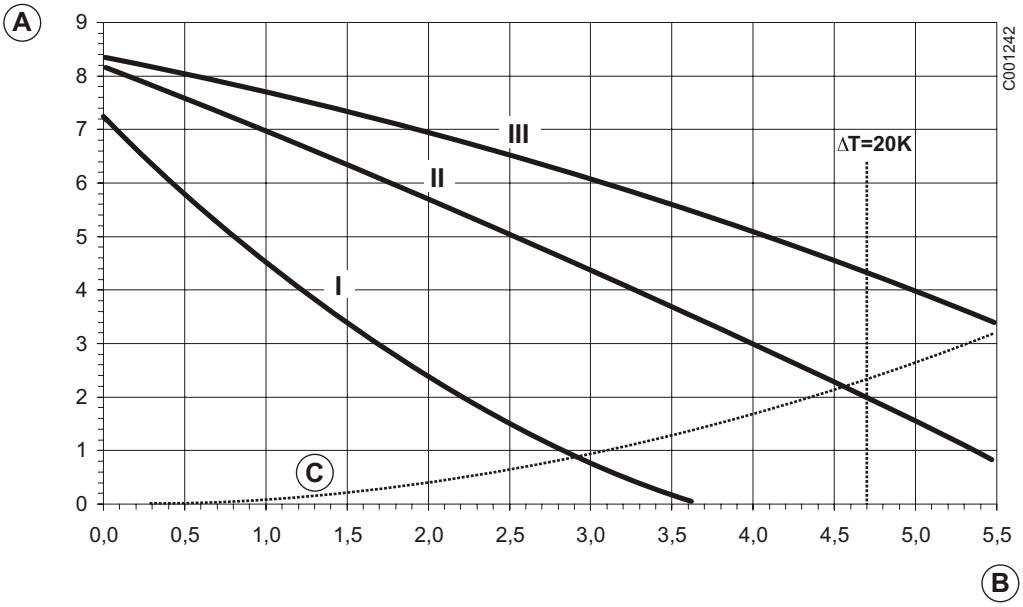

A. Rated net head (mCE)

B. Flow rate (m^3/h)

C. Loss of load Gas 110 Eco 115

4 Control and safety equipment

4.1 Control panel

4.1.1 General

The boiler is supplied with a standard set of defaults pre-programmed for normal operation but can be tailored by the Engineer to suit most site conditions. These values are set and read using the built in control panel or with a notebook computer/PDA (with an interface and software available from Broag).

For security the control has three levels of access:

- User level - free access
- Service level - access with service code by qualified personnel
- Factory level - access by PC with factory code (Remeha only).

4.1.2 Layout of the control panel

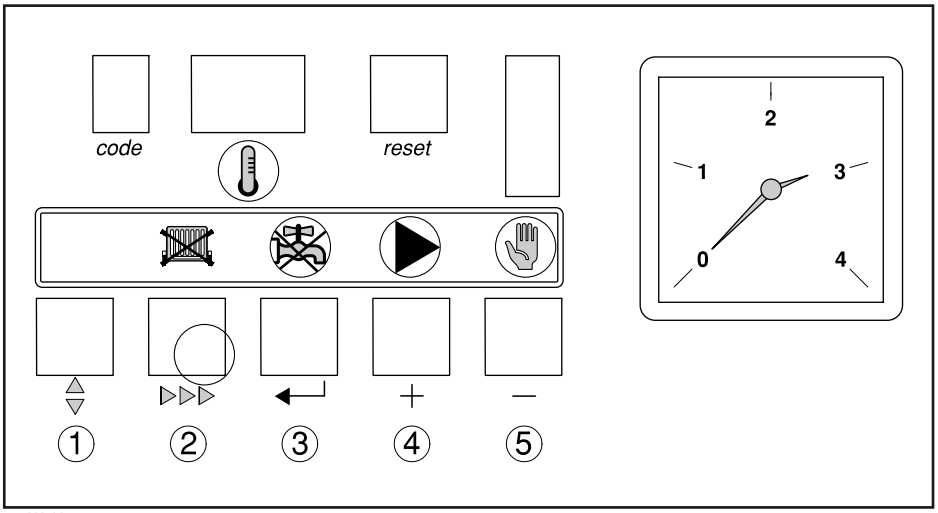

00.W4H.79.00044

a. "code"-display	
Indicates on user level:	Operating mode: only one digit
	Setting mode: digit with dot
	Read-out mode: digit with flashing dot
	Shut-off mode: letter
	Forced full load: letter
	Forced part load: letter
Additional indication on service level:	Speed mode: alternate half digit
	Failure mode: flashing digit
b. -display	
Indicates:	Temperatures, settings, fault codes (flashing digits), shut-off codes (flashing dots)
c. reset-key:	To reset after a lockout condition
d. "-key:	Program function: key to select the required mode
e. "▷▷▷"-key:	Program function: key to select the required program within the selected mode
e. ▷▷▷-key + -symbol:	Switch function: burner switch HTG (manual override)
f. "↵"-key:	Program function: key to save the settings
f. ↵-key + -symbol:	Switch function: burner switch DHW (manual override)
g. [+]-key:	Program function: to select a higher setting
g. [+]-key + -symbol:	Switch function: pump manual override
h. [-]-key:	Program function: to select a lower setting
h. [-]-key + -symbol:	Switch function: manual override (hand/auto)

4.1.3 Combined key functions (in operating mode only)

When the boiler is in the operating mode, keys with the illuminated symbols above have a double function (Program and Switch).

To use them for a Program function press the key once - and for a Switch function (either on or off) press the key and hold for 5 seconds.

The status of the switch function will be confirmed by the illuminated symbol as follows:

- "▷▷▷"-key and -symbol:
- (symbol) not illuminated: HTG under normal control
- red (symbol) on: HTG off (manual override)

- "←"-key and -symbol:
- (symbol) not illuminated: DHW under normal control
- red (symbol) on: DHW off (manual override)

- [+]-key and ▶-symbol:
- green (symbol) on: continuous pump operation
- (symbol) not illuminated: pump under boiler control

- [-]-key and -symbol:
- green (symbol) on: HTG on (manual override)
- (symbol) not illuminated: HTG under normal control.
  Manual override will stay active until deactivated, even if power is switched off and then restored.

NOTE: In the Switch function, (in order to protect the boiler and the installation) the flow temperature cannot exceed it's pre-set maximum. It is also not possible to change any parameters.

- Forced mode 'high' (H)

By pressing the "⇕" and [+]-key simultaneously in operating mode, the boiler will burn at maximum power. The letter H will now appear on the display.

By pressing the [+] and [-]-keys simultaneously, the boiler will return to operating mode. Following a manual override the boiler will return to normal (auto control) if no keys are used within a 15 minute period

- Forced mode 'low' (L)

By pressing the "⇕" and [-]-key simultaneously in operating mode, the boiler will burn at minimum power. The letter L will now appear on the display. By pressing the [+] and [-]- keys simultaneously, the boiler will return to operating mode. Following a manual override the boiler will return to normal (auto control) if no keys are used within a 15 minute period.

4.1.4 Display of values with more than two digits

The display has only two digits available therefore values over this are displayed as follows:

- negative values will be indicated by a dot behind the last digit e.g. 1.0 = -10
- values from 00 to 99 will be indicated without any punctuation marks
- values from 100 to 199 will be indicated by a dot between both digits e.g. 0.0 = 100, 1.0 = 110, 9.9 = 199.
- values from 200 to 299 will be indicated by a dot behind every digit e.g. 0.0. = for 200, 1.0. = 210, 9.9. = 299.

4.2 Flow diagram control system

Press the "⊼"-key	Press the "⊳⊳⊳"-key	
	"code"-display	(🌡)-display
Operating mode § 4.3	Only digit or letter	
	0 - 9, H, L, b	Flow temperature or shut-off code
Setting mode, user level § 4.5	Digit or letter with dot	
	1.	Flow temperature set-point
	2.	Pump run on time HTG
	3.	DHW temperature set-point
	A.	Boiler control setting
	u.	Base point internal compensation slope
Setting mode, service level § 4.6	Service engineer level only:	
	4.	Flow temperature set-point during forced part load
	5.	High limit temperature set-point
	6.	Fan speed at full load (HTG)
	7.	Fan speed at part load (HTG and DHW)
	8.	Modulation start point ΔT (F/R)
	9.	Interface selection (control option)
	b.	DHW cut-in ΔT
	C.	Fan speed at full load (DHW)
	d.	Intern
	E.	N/a
	F.	N/a
	G.	Forced part load time after start (HTG)
	H.	Fan speed at start
	I.	DHW control stop or boiler modulation set point (based on parameter 3.)
	J.	DHW control mode
	L.	N/a
	n.	HTG cut-in ΔT (based on return)
	o.	N/a
	P.	Boiler type
	t.	Intern
	U.	Maximum delay time
	9.	Start point for 0 V analog signal
	y.	End point for 10 V analog signal
	11.	Intern

Read-out mode § 4.7	Digit or letter with flashing dot	
	1.	Actual flow temperature
	2.	Actual return temperature
	3.	Actual DHW temperature (with sensor)
	4.	Actual outdoor temperature (only if outdoor sensor fitted)
	5.	N/a
	6.	Flow temperature (set point)
	7.	Actual heat demand status
	8.	Calculated HTG cut-in temperature
	9.	Actual flow temperature rise
	A.	N/a
Service engineer level only:		
Speed mode § 4.8	Alternate half digit	Fan speed

Failure mode § 4.9	Flashing digit	
	1	Failure code
	2	Operating code during failure
	3	Flow temperature during failure
	4	Return temperature during failure
	5	DHW tempearture during failure
	6	N/a

4.3 Operating mode (X□□)

During operation the "code"-display shows the status (position in cycle) of the boiler, whilst the -display indicates the actual flow temperature.

The digits or letters in the code-display have the following meaning:

Code	Description
0	Standby: there is no heat demand from control system
1	Pre-purge: before start-up, the boiler is purged for 4.2 seconds Post-purge: when the heat demand has been met, the fan continues to operate for another 10 seconds
2	Ignition: ignition is activated for 2.4 seconds while the gas valve is opened
3	HTG mode: the boiler operates in the HTG mode
4	DHW mode: the three way valve or DHW pump activated (Broag priority only)
5	Internal check
6	Normal control stop during HTG (flow temperature > set-point + 5 °C)
7	HTG pump run on
8	DHW pump run on or for three way valve option, HTG pump run on with valve open to DHW (max. 5 minutes)
9	Normal control stop during DHW (flow temperature > set point DHW + DHW control stop set point + 5 °C)
b	Shut-off mode
H	Forced full load
L	Forced part load

4.4 Shut-off mode (bXX)

During shut-off mode condition the "code"-display will show a b, whilst the (🌡)-display indicates the cause with two flashing dots. Table below details cause of shut-off mode.

Code	Description
b25	Maximum acceptable flow temperature rise exceeded. The boiler will shut off for ten minutes, then restart. Should the flow temperature conditions remain the same after 5 attempts, this code will be recorded as a shutdown failure. Boiler will not lockout.
b26	Contacts of the external interlock have opened during heat demand. The boiler will shut off for 120 seconds. Should the contacts close again during heat demand, the boiler will wait the remaining time from the 120 seconds before attempting a restart.
b28	Internal check on fan speed. After 5 attemps, the boiler will lockout. This code will be recorded.
b29	Internal check on fan speed. After 5 attemps, the boiler will lockout. This code will be recorded.
b30	Maximum temperature difference between flow and return exceeded. The boiler will shut off for 150 seconds, then restart. Should the temperature difference conditions remain the same after 10 attemps, this code will be recorded as a shut-down failure. Boiler will not lockout.
b43	One or several adjusted parameters out of range including some factory defaults which should not have been changed. Check and reset parameters: - press the "reset"-key immediately followed by pressing the "⇕"-key for about 12 seconds, - "code"-display shows P, - use [+] and [-] -keys to enter correct boiler parameter (P=14 for Gas 110 Eco 115, P=64 for Gas 110 Eco 65) - press "↵"-key to confirm settings, - check parameter settings and change were needed or desired.

NOTE: Shut-off mode is a normal boiler operating function and does not represent a boiler failure. However, this may indicate a system problem, an internal boiler check or an incorrect parameter setting.

4.5 Setting mode user level (X□□)

Code	Description	Setting range	Preset
1	Flow temperature set point	20-90 °C	80
2	Pump run on time HTG	00 = pump run on 10 seconds 01-15 = pump run on in minutes	03
3	DHW temperature set point	20-75 °C (only with sensor)	55
A	Boiler control setting	Control mode (modulating-on/off etc.)	11
U	Base point internal compensation slope	N/a	20

NOTE: Changing code 2 and code A should only be on design engineers advice.

4.5.1 Flow temperature set point (1.)

The required flow temperature is adjustable from 20 to 90 °C.

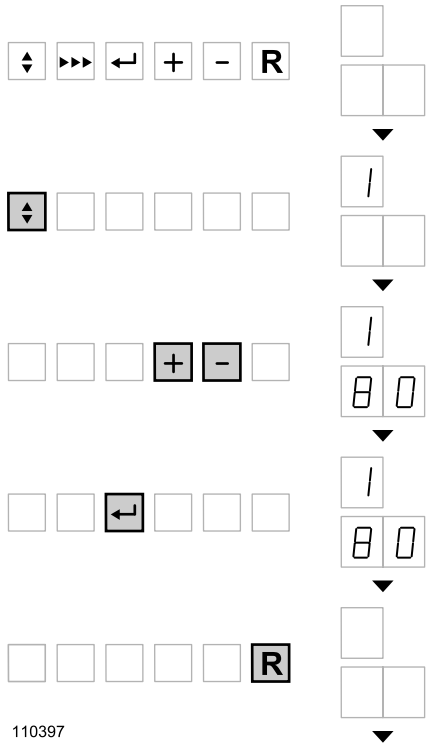

4.5.2 Pump run on time HTG (2.)

Pump run on time can be adjusted (Please refer to installation contractor)

- Press the "⇕" -key until the digit 1. (with dot) appears in the "code"-display.
- Press the "▷▷▷"-key until the digit 2. (with dot) appears in the "code"-display.
- Set the required value, using the [+] and [-] -keys.
- Press the "↵"-key to store the new value (value will flash twice).
- Press the "reset"-key to return to operating mode.

NOTE: For continuous pump operation use manual override,

See chapter 4.1.3.

Code	🌡	Description
2.	00	Pump runs on for 10 seconds
2.	X.X	Pump runs on for 1 to 15 minutes (XX = 01 to 15)

4.5.3 DHW temperature set-point (3)

The DHW temperature is adjustable from 20 to 75 °C (factory default 55°C). Only with Broag DHW priority sensor.

- Press the "⇕" -key until the digit 1. (with dot) appears in the "code"-display.
- Press the "▷▷▷"-key until the digit 3. (with dot) appears in the "code"-display.
- Set the required value, using the [+] and [-] -keys.
- Press the "↵"-key to store the new value (value will flash twice).
- Press the "reset"-key to return to operating mode.

REMARK: there are further adjustments available on service level. Please refer to your service engineer or contractor

See chapter 4.6.7.

4.5.4 Boiler control setting (A.)

The boiler is factory set to option 11 (HTG modulating or on/off with DHW on).

To change the control option:

- Press the "⇕" -key until the digit 1. (with dot) appears in the "code"-display.
- Press the "▷▷▷"-key until the digit A. (with dot) appears in the "code"-display.
- Set the required X and Y values as listed below in using the [+] and [-] -keys.
- Press the "↵"-key to store the new value (value will flash twice).
- Press the "reset"-key to return to operating mode.

With the "code"- display showing A. - the 🌡-display will indicate the method of boiler control in the first segment X and the option to turn the HTG and DHW on or off in the second segment Y. By using codes from the table below a series of control options are available.

Example: XY

11 - Boiler enabled internal modulation with booster on * - HTG and DHW on (as default)

42 - Analog signal 0 -10 V on temperature - HTG on and DHW off

23 - Boiler high/low - HTG off and DHW on

🌡-display	Description
First segment X	Boiler control option
1	Boiler enabled internal modulation with booster on *
2	Boiler high/low
3	Boiler enabled internal modulation with booster off *
4	Analog signal 0 - 10 V on temperature
5	Analog signal 0 - 10 V on output %
Second segment Y	Operation mode
0	HTG and DHW off
1	HTG and DHW on
2	HTG on and DHW off
3	HTG off and DHW on

* NOTE: boiler setting A. 11 and 31 have the same function

4.6 Setting mode service level (X.00)

(only for the qualified service engineer with product knowledge).

To prevent accidental, unauthorised access by non-qualified persons the control system requires an input code to gain access to the second level of boiler control.

- Press the "⇕" - and "⊳⊳⊳"-keys simultaneously and hold. The "code"-display now shows a letter C with a random number in the ⓘ-display.
- While holding both keys pressed, set the ⓘ-display to 12, using the [+] or [-] - keys and press the "←"-key.
- The display will flash twice confirming acceptance of the access code.
- Release the keys and C 12 will dissappear from the display. You are now in the service mode.

WARNING: changing factory defaults without reference to the tables contained in this manual may result in incorrect operation.

- To delete the service code press the "reset"-key once
- If no keys are pressed over a 15 minute period the service code will delete automatically.

Code	Description	Setting range	Preset
4.	Flow temperature set point during forced part load	20-90 °C	79
5.	High limit temperature set point	90-10 (= 110 °C)	00 (= 100)*
6.	Fan speed at full load (HTG)	10-70 hundreds	70
7.	Fan speed at part load (HTG and DHW)	10-60 hundreds	13
8.	Modulation start point ΔT (F/R)	05-30 °C	20
9.	Interface selection (control option)	00 internal (Modulating controls only) 01 external interface	01
b.	DHW cut-in ΔT	10-05 read 1 - 5 °C 06 read 10 °C 07 read 15 °C 08 read 20 °C	05
C.	Fan speed at full load (DHW)	10-70 hundreds	70
d.	Intern	May not be changed!	00
E.	N/a		0.0 (= 100)*
F.	N/a		25
G.	Forced part load time after start (HTG)	00-15 minutes	03
H.	Fan speed at start	May not be changed!	25
I.	DHW control stop or boiler modulation set point (based on parameter 3.)	00-30 °C	20
J.	DHW control option	00 = Three way valve (port A = HTG, port B = DHW) 01 = DHW pump 02 = inverted three way valve (port A = DHW, port B = HTG)	01
L.	Variable speed pump	N/a	0.3 (= 103)*
n.	HTG cut-in ΔT	10. (= -10 °C)-20 °C	03
o.	N/a		10
P.	Boiler type	May not be changed!	14
t.	Intern	May not be changed!	01
U.	Maximum delay time	00-99 minutes	15
9.	Start point for 0 V analog signal	50. (= -50 °C)-50 °C	00
y.	End point for 10 V analog signal	50-9.9. (= 299) °C	0.0 (= 100)*
11.	Intern		10

* NOTE:

See chapter 4.1.4 for values over two digits

4.6.1 Flow temperature set point during forced part load (4)

Adjustable from 20 to 90 °C.

This value will prevent the flow temperature exceeding this temperature during the part load time.

4.6.2 High limit thermostat (5)

Adjustable from 90 to 110 °C (10).

This value sets the high limit temperature at which the boiler will shut down in a lock out condition requiring manual intervention.

* NOTE: this parameter will have an effect on the minimum flow rate requirement

See chapter 5.3.

4.6.3 Fan speed at full load HTG (6)

Adjustable from 18% to 100% output (= approx. 1300 to 7000 rpm).
This value sets the maximum output of the boiler.

4.6.4 Fan speed at part load (HTG and DHW - 7)

Adjustable from 18% to 100% output (= approx. 1300 to 7000 rpm).
This value sets the minimum output of the boiler.

4.6.5 Starting point modulation (8)

Adjustable from 5 to 30 °C.

This value sets the flow/return ΔT point at which the control modulation begins. If the ΔT continues to rise, at 40 °C the boiler will be at minimum output (parameter 7), at 45 °C the boiler will shut off (code 630)

See chapter 4.4.

The factory default should be correct for most installations. Changing this value should only be carried out on advice from the service engineer. Don't change the factory default for the minimum output (parameter 7), in cases of minimal flow.

NOTE: Installations with low flow problems would benefit by reducing this set point to force modulation to begin sooner and minimise boiler off time.

4.6.6 Interface selection (9)

Adjustable 00 or 01.

This value sets the control option.

01 for standard 0 -10 V external control.

00 for Open Therm option.

4.6.7 DHW cut-in temperature (b)

Adjustable from 01 to 20 °C (8 steps)

See chapter 4.6. Table

DHW demand

With sensor:

- The DHW demand is satisfied when the DHW temperature equals the DHW set point temp (parameter 3) + 5 °C.
- The DHW cut-in temperature sets the ΔT below this end point for DHW demand.
  Cut-in temperature =
  DHW set point (55) + 5 - parameter b (5), i.e. 55 + 5 - 5 = 55 °C.

With thermostat:

- The thermostat determines the DHW demand.

Boiler modulation during continuing DHW demand

Sensor and thermostat:

- The boiler will modulate when the flow temp equals the DHW set point + DHW control stop set point (parameter 1) i.e. 55 + 20 = 75.
- The boiler carries out a control stop at a flow temp of 80 °C (modulation point + 5 °C), the display initially shows 980, reducing to 975.
- The DHW cut-in temperature sets the below this control stop.
  Cut-in temperature =
  DHW set point (55) + DHW control stop set point (parameter 1) + 5 - parameter b (5), i.e. 55 + 20 + 5 - 5 = 75

4.6.8 Fan Speed at DHW full load (C)

Adjustable from 18% to 100% output (= approx. 1300 to 7000 rpm).

This value sets the maximum output of the boiler.

Parameters d - E - and F are factory set and must not be changed

4.6.9 Forced part load time after start (HTG only - G)

Adjustable from 00 - 15 minutes.

This value sets the period of time the boiler will stay on part load at start up during which time the flow temp is limited by part load temp set point (parameter 4)

Changing the factory default should only be carried out on advice from the service engineer.

NOTE: When using an external analog (0 -10 V) or 2 wire modulation input, the factory default 03 should be changed to 00.

Parameter H factory set must not be changed

4.6.10 DHW control stop set point (I)

Adjustable from 00 - 30 °C.

See chapter 4.6.7.

4.6.11 DHW control option (J)

This value sets the DHW control option.

00 Three way diverting valve (port A - HTG and port B - DHW)

01 DHW pump

02 Inverted three way diverting valve (port B - HTG and port A - DHW)

Parameter L not applicable

4.6.12 HTG cut in temp (n)

Adjustable from 10 (-10) to 20 °C.

This value sets the ΔT below actual return temp at the moment of control stop during HTG demand.

A control stop occurs when the flow temp equals the flow temp set point +5 °C.

HTG cut in temperature = actual return temperature at the moment of control stop (e.g. 60) - parameter n (3)

i.e. 60 - 3 = 57 °C

If this takes longer than the maximum delay time (parameter U), the boiler will restart (unless flow temperature exceeds flow temperature set point).

Parameter o not applicable

4.6.13 Boiler type (P)

Factory default must not be changed.

See chapter 4.4 Shut-off mode, b43.

Parameter t factory set must not be changed

4.6.14 Maximum delay time (U)

Adjustable from 00 - 99 minutes.

This value sets the maximum off time following a control stop. The minimum off time is preset to a fixed value (150 seconds).

A combination of both values is used to prevent hunting taking place.

4.6.15 Start and end point analog signal (9 and y)

Start point (0 V): adjustable between 50 (-50) °C and +50 °C.

This value sets the required flow temp at 0 V signal input (restricted by the minimum flow set point).

End point (10 V): adjustable between + 51 °C and 99 (+299) °C.

This value sets the required flow temp at 10 V signal input (restricted by the maximum flow set point).

NOTE: These settings are only applicable when boiler control operation parameter (A) has the X value set to 4.

4.7 Read-out mode (X.00)

To check boiler set points and values.

Using the "⇕" - key, press repeatedly until 1. (flashing dot) appears in the "code"-display. Then select the required code 2., 3. or 4. etc. using the "⊳⊳⊳"-key.

Code	Description	Read-out (example)
1.	Actual flow temperature	80
2.	Actual return temperature	70
3.	Actual DHW temperature (only with sensor connected)	58
4.	Actual outdoor temperature (only with sensor connected)	05
5.	N/a	37.
6.	Flow temperature (set point)	80
7.	Actual heat demand status	1X = demand 0X = no demand
8.	Calculated HTG cut-in temperature	67
9.	Actual flow temperature rise [0.1 °C/sec]	02
A.	N/a	

4.8 Fan speed mode (,,00)

Using the "⇕" - key, press repeatedly until "code"-display shows alternate flashing half digits.

The value in the 🌡-display shows the actual fan speed using two alternate double digits as table:

Code	Description	Example 7000 r/m	
,,	Fan speed	70	hundreds
,.	Fan speed	00	units

4.9 Failure mode (X00)

To check the latest failure with the accompanying operating codes and relevant temperatures.

Using the "⇕" - key, press repeatedly until 1 (flashing digit) appears in the "code"-display.

Then select the required code 2, 3 or 4 etc. using the "⊳⊳⊳"-key and read off the relevant value.

Code	🌡	Description
1	37	Display of failure code § 8.2
2	03	Operating mode during failure
3	53	Flow temperature during failure
4	40	Return temperature during failure
5	60	DHW temperature during failure
6	37.	N/a

Example as above:

Failure code 37 indicates the return temperature sensor failed during HTG operation (03), at a flow temperature of 53 °C, a return temperature of 40 °C and DHW temperature of 60 °C.

5 Installation

5.1 Statutory terms and conditions of installation and maintenance

The complete installation must comply with the current editions of relevant British Standards and codes of practice, including the latest local and national regulations for this type of equipment.

All gas appliances must, by law, be installed by a competent qualified engineer holding the relevant qualifictions and certificates (for example ACS and IEE regulations.)

IMPORTANT:

The Broag-Remeha 110 is a CE certified appliance and must not therefore be modified or installed in any way contrary to these "Installation and Maintenance Instructions". These manufacturer's instructions must NOT be taken as overriding statutory obligations. Failure to install this appliance correctly could result in an unsafe condition which can lead to prosecution. It is your own interest and that of safety to ensure that the law is complied with.

5.2 Important comments on the treatment of the heating circuit

■ Water treatment

- Use untreated tap water only to fill the central heating system.
- The pH value of the system water must be between 6 and 9.
- Chloride content <20 mg/l
- Conductivity <500 µS/cm at 25 °C
- In case inhibitors are being used, please follow the instructions given.

If used correctly water treatment can improve the boilers efficiency and increase the anticipitated life expectancy of the boiler. For further information a special document "Remeha water quality regulations" is available from Broag. The regulations mentioned in this document must be followed.

As most systems contain a variety of metals, it is considered good practice to provide some form of water treatment in order to prevent or reduce the following:

- metallic corrosion
- formation of scale and sludge
- microbiological contamination
- chemical changes in the untreated system water.

⚠ All scale deposists, however small, will reduce the efficiency of the boiler and should be prevented.

Suitable chemicals and their use should be discussed with a specialist water treatment company prior to carrying out any work (environmental aspects, health aspects). The specification of the system and manufacturers recommendations must be taken into account, along with the age and condition of the system.

New systems should be flushed thoroughly to BS 7593 (1992) to remove all traces of flux, debris, grease and metal swarf generated during installation. Care to be taken with old systems to ensure any black metallic iron oxide sludge and other corrosive residues are removed, again by power flushing, ensuring that the system is drained completely from all low points.

ℹ Please ensure that the new boiler plant is not in circuit when the flushing takes place, especially if cleansing chemicals are used to assist the process.

It is important to check the inhibitor concentration after installation, system modifications, filling the system and every service in accordance with these instructions.

For the correct dosage and the suitability of inhibitors for use with our boilers and for further information on water treatment or system cleaning we advise direct contact with either of the following companies:

FERNOX, Cookson Electronics
Forsyth Road
Sheerwater
Woking
Surrey GU21 5RZ
Tel.: 0870 6015000
Fax.: 01799 522280
Email.: sales@fernox.com
Web site.: www.fernox.com

or

WESTERN ENVIRONMENTAL
Western House
Britonwood Trading Est
Knowsley
Merseyside
L33 7YP
Tel.: 0151 546 5777

BETZ DEARNORN Ltd
Sentinal
Foundry Lane
Widnes
Cheshire WA8 8UD
Tel.: 0151 424 5351
Fax.: 0151 420 5447

■ Cold feed and expansion tank height for open vented systems

We recommend the boiler is installed on a closed (pressurised) system wherever possible with a minimum operating pressure of 0.8 bar. However, open vented systems can be accomodated as follows: the cold feed and expansion tank heights for all open vented systems must comply with the requirements laid down in the Health and Safety Executive publication (latest edition).

The Gas 110 Eco 115 / 65 series boilers require a minimum static head of:
- 5 m for Gas 110 Eco 115,
- 3 m for Gas 110 Eco 65.

For operation in open vented systems:
- parameter 1. (flow temperature set-point) must be set to 75 ,
- parameter 8. (boiler modulation start point) must be set to 15,
- parameter 5. (high limit temperature set-point) must be set to 95.

■ Safety valve

A safety valve should be fitted in accordance with the relevant British Standard.

■ System pump

The boiler must be installed on a fully pumped system.

■ Installing the boiler in existing installations

- Remove sludge from the installation,
- Clean the installation with a universal cleaner to eliminate debris from the appliance,
- Thoroughly rinse the installation until the water runs clear and shows no impurities,
- Protect the installation against corrosion and frost with an inhibitor and an anti-freeze.

The boiler must be used only in closed circuit heating installations. If you have underfloor heating, the installer must install a safety thermostat with manual reset to prevent overheating. For an underfloor heating circuit without system insulation, only oxygen tight heating pipes must be used. If the plastic pipe manufacturer recommends a chemical additive, it is necessary to be particularly careful that there are no contraindications on the aluminum or aluminum alloy content of components. For floor heating systems with pipes that are not oxygen tight, the system must be insulated (heat exchanger). In this case, the floor circuit must be protected separately (Expansion vessel, Safety valve).

A minimum water level safety device is not necessary. Protection is ensured by the control unit.

■ Minimum water flow

The maximum temperature difference between flow and return, and the maximum rate of rise of the flow temperature and boiler block temperature are limited by the boiler modulating controls, as a result, the boiler is virtually unaffected by low water flow, however for a continuous supply of heat the boiler requires a minimum flow of 30% of the nominal flow at the relevant design.

Otherwise, the minimum required flow is:
- 240 l/h for Gas 110 Eco 65,
- 350 l/h for Gas 110 Eco 115.

■ In the event of excessive pump noise

Run-off noise may occur on installations with a direct heating circuit, fitted with thermostatic valves, under certain conditions of use when the hydraulic systems are not perfectly balanced.

If this is the case, we recommend fitting a ❶ preset differential valve (200-250 mbar) between the out pipe and the return pipe on the heating installation.

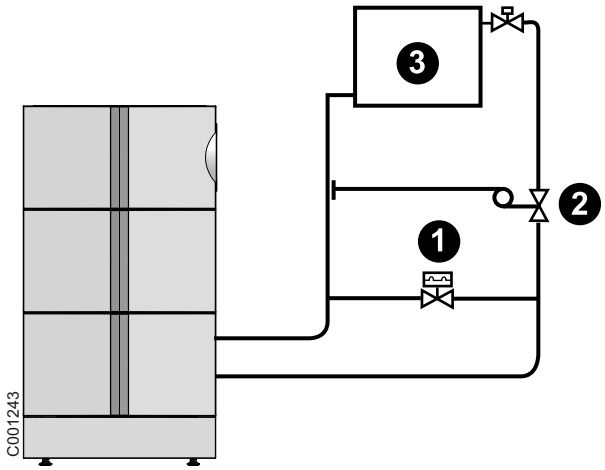

⚠ Poor adjustment of the differential valve may cause a continuous increase in the return of water to the boiler.

If there are particular requirments for silent running, it is a good idea to fit a ❷ differential pressure regulator (setting 100 -150 mbar).

■ Location of the installation

Gas 110 Eco 115 / 65 boilers must be installed in a frost-free room.

⚠ In order to avoid damage to the boiler, it is necessary to prevent the contamination of combustion air by chlorine and/or fluoride compounds, which are particularly corrosive. These compounds are present, for example, in aerosol sprays, paints, solvents, cleaning products, washing products, detergents, glues, snow clearing salts, etc.
Therefore:
- Do not suck in air evacuated from premises using such products: hairdressing salons, dry cleaners, industrial premises (solvents), premises containing refrigeration systems (risk of refrigerant leakage), etc.
- Do not stock such products close to the boilers.
If the boiler and/or peripheral equipment are corroded by such chloride or fluoride compounds, the contractual guarantee cannot be applied.

The warranty does not apply to damage to the boiler caused by these instances. If the heating device is installed in residential premises where people are present all the time, it is necessary to use a concentric ambient air inlet / combustion gas evacuation installation. When installing the boiler, it is necessary to comply with degree of protection IP21.

⚠ These actions must be carried out by a qualified engineer holding the relevant qualifications and certificates (for example ACS and IEE regulations).

Installation must be carried out in accordance with the prevailing regulations, the codes of practice and the recommendations in these instructions.

The gas shut off valve should be located on the back of the boiler. Pipe diameters must be defined in accordance with the current editions of relevant British Standards and codes of practice, including the latest local and national regulations for this type of equipment.

To prevent damage caused by overpressure on the gas valve, the gas supply valve must be closed before carrying out the pressure test on the gas supply pipe. Decompress before reopening the valve.

In old gas networks, we recommend fitting a gas filter with a large surface area.

5.3 Water discharge connection

Discharge condensation water directly into the main drain. Given the degree of acidity (pH 2-5), use only plastic materials to make the connection. Open the gas valve. Make the connection to the main drain with a visible flow connection.

The discharge duct must have a minimum gradient of 50 mm/m. The discharge of condensation water via the gutter is not authorised, given the risk of frost and the damage to the materials usually used for gutters.

5.4 Room sealed installations

It is unnecessary to provide separate combustion air to the room/compartment as this is supplied direct to the boiler via the concentric or eccentric system and the room sealed horizontal or vertical terminal unit.

Additional ventilation will be required to the room/compartment in accordance with the British Standards (compartment ventilation).

For maximum flue/air inlet length

See chapter 6.1.2

For installations where supply and discharge points are in two different pressure zones (eccentric only), please contact Broag Technical Dept. for further details and advice.

See chapter 6.1.1

NOTE: the boilers can be installed on a flue dilution system, but must have a total flue break to avoid boiler controls being affected by the dilution fan pressures. For full details, please contact Broag.

Comply with British standards BS6644/2005 and BS5440 part 2.

5.5 Checking the gas inlet

These actions must be carried out by a qualified engineer.

- Check the leak tightness of the gas inlet, including the gas valves.
- Open all the stop valves on the gas inlet.
- Empty the gas inlet.

Maximum authorised pressure on the gas valve: 60 mbar. In the event of higher control pressures, disconnect the boiler from the gas inlet at the threaded connection to the gas stop valve. Closing the gas stop valve is not sufficient.

5.6 Reversal of the direction the control panel access door opens

As standard, the control panel access door opens to the left. To open the control panel access door to the right, proceed as follows:

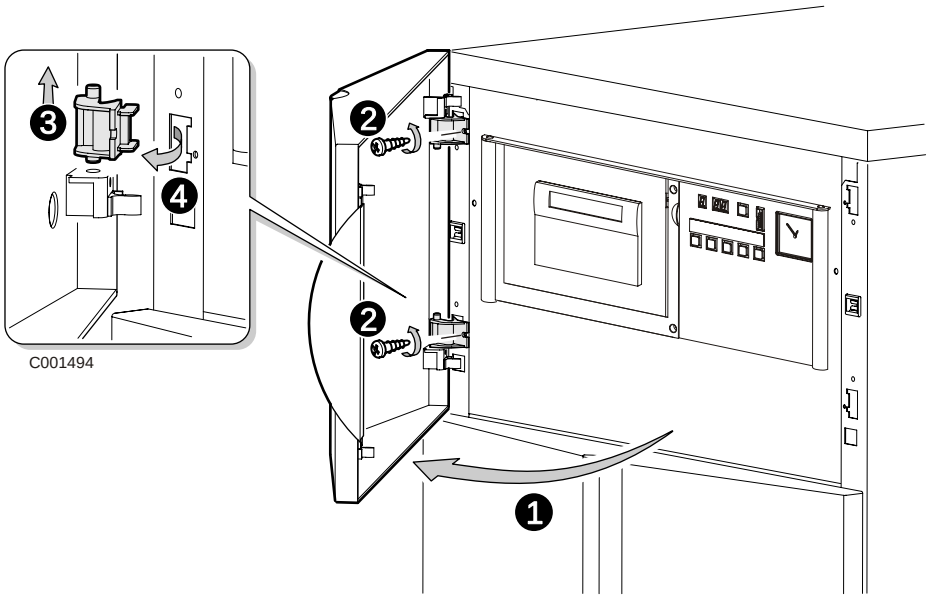

- Modify the direction of the door handle

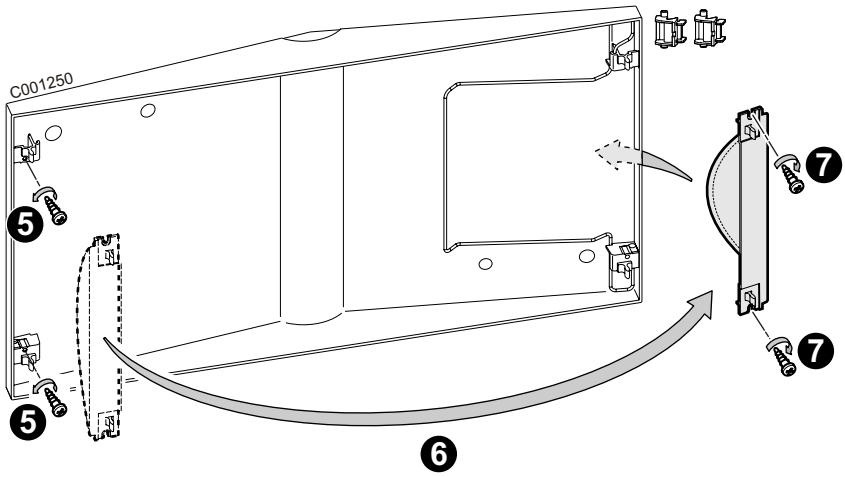

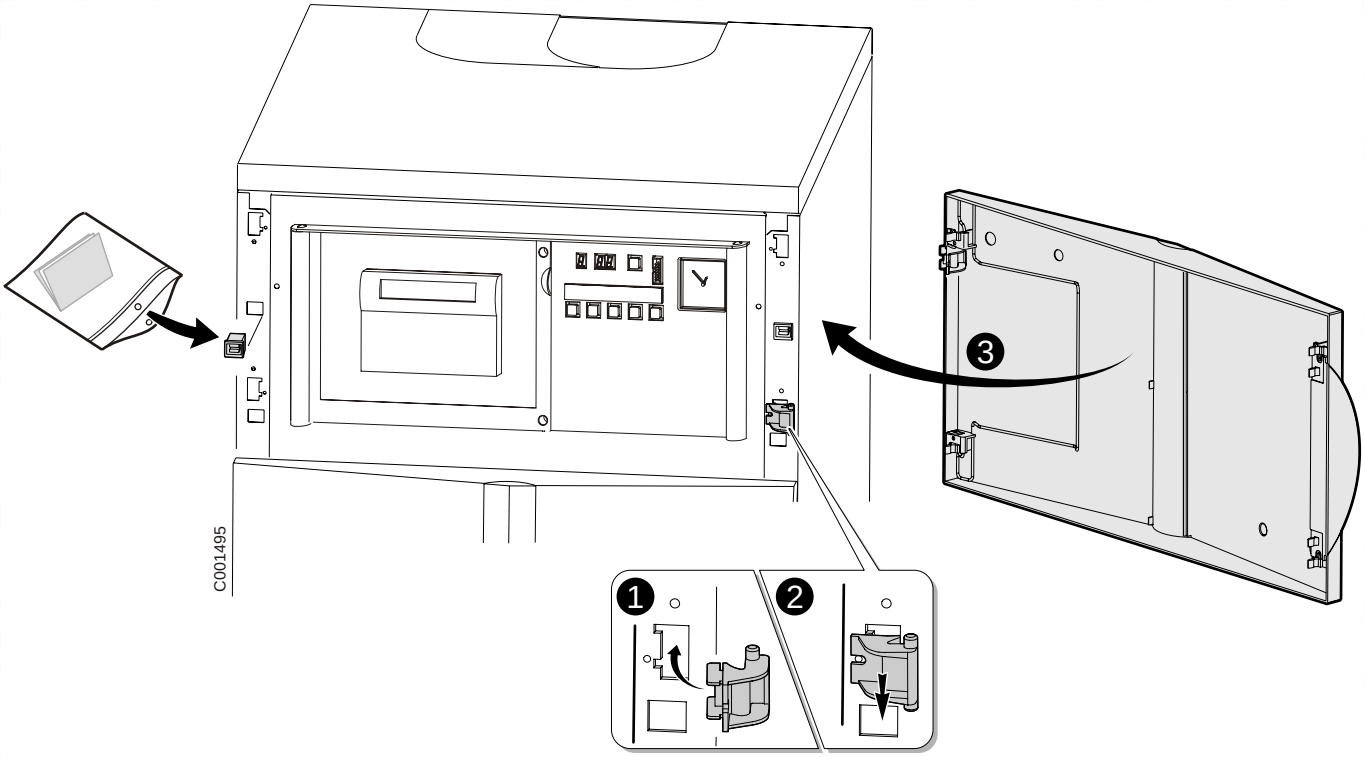
C001495
1
2
3

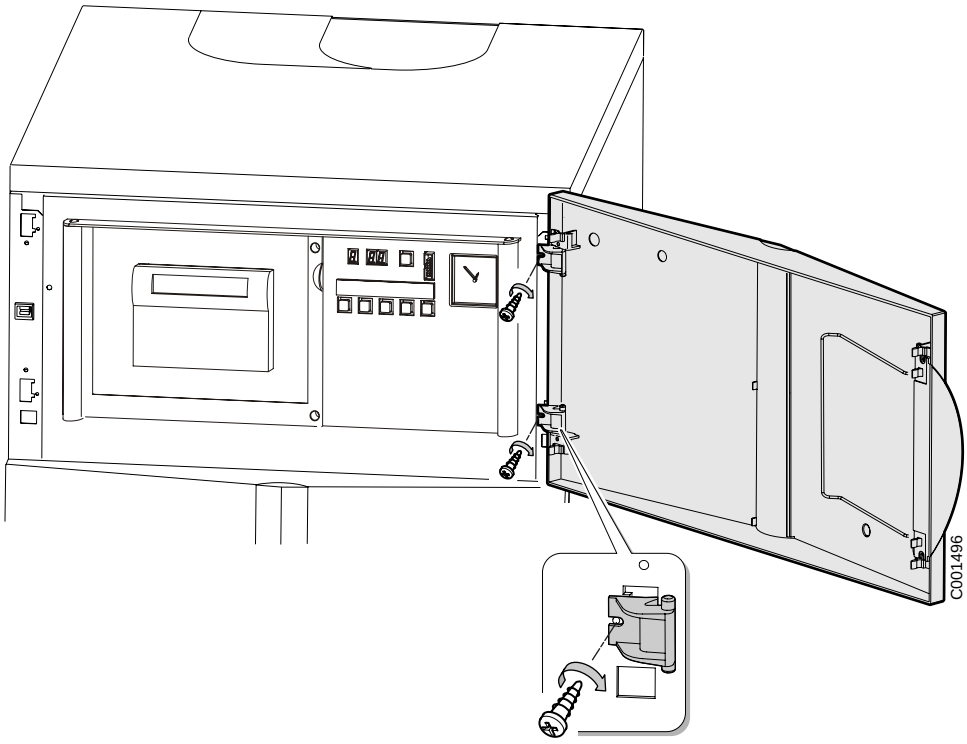
C001496

5.7 Levelling

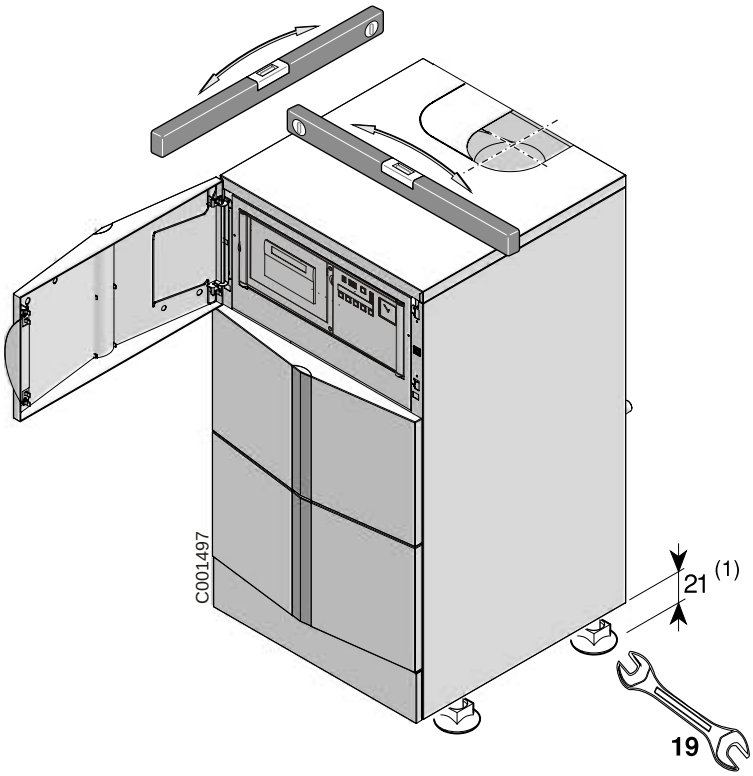

Level the boiler by turning the adjustable feet. To adjust, take the load off the foot using a lever.

(1) Basic dimension 21 mm. adjustment possible: 21 to 40 mm.

5.8 Handling the boiler

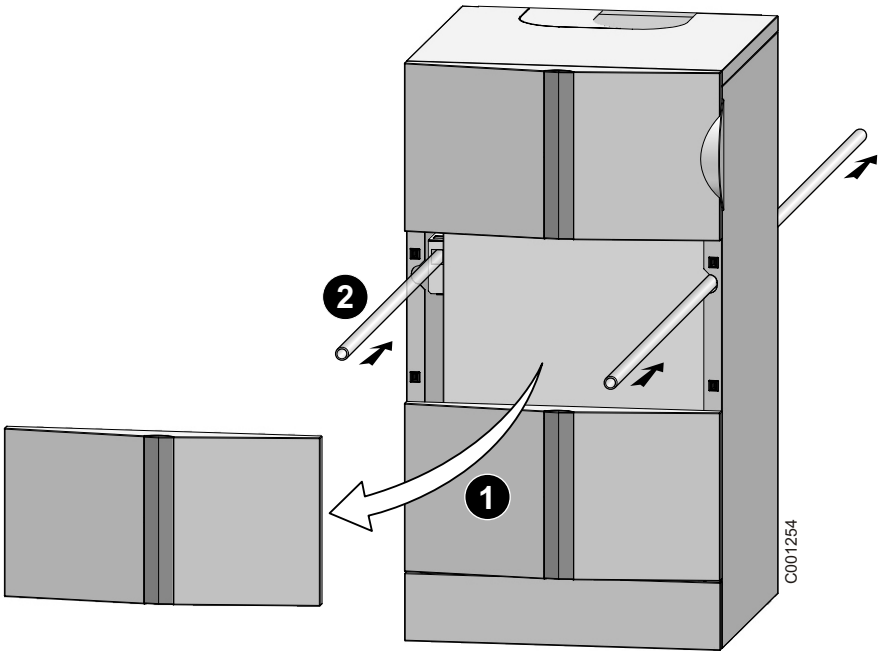

The boiler can be lifted by using 2 tubes Ø3/4" placed as shown in the view.

6 Connecting the flue

6.1 Flue pipe connections

- The horizontal sections on the flue gas side will be constructed with a gradient to the boiler of 3 %.
- Type C appliances can only be installed with the systems mentioned in these technical instructions (particularly concentric pipes, terminal connection parts).
- As connections of type B_{23} chimney conduits and type C_{53} conduits are pressurised, they must be either installed outside or in a ventilated brick sheath.

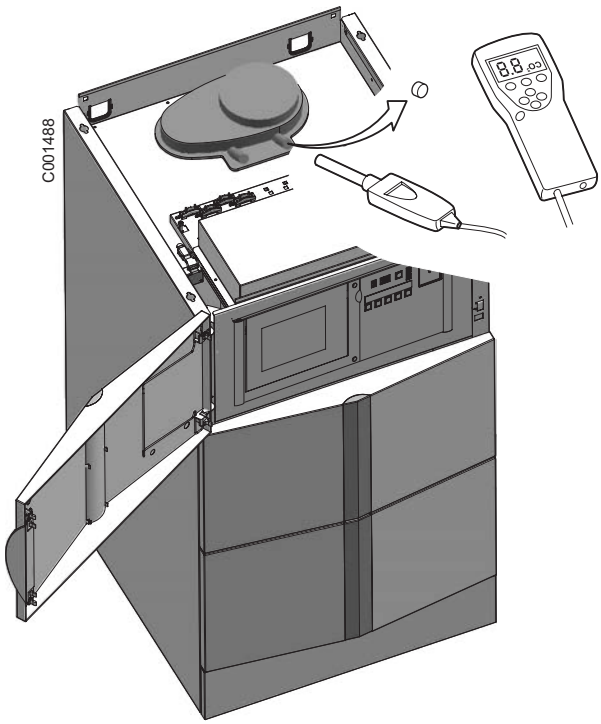

Comply with the installation instructions and the information on the authorised lengths of the flue gas pipes.

See chapter 6.1.2

- Remove the anti-dust cap.
- Mount the flue gas pipe or the fresh air/flue gas evacuation system in compliance with the assembly instructions.
- Check the seal.
  - Static test overpressure: 1000 Pa
  - Maximum leak rate: 50 l/hm^2 depending on the internal surface of the flue gas pipe
    AØ80 = 0.25 m^2/m, AØ100 = 0.31 m^2/m
- On concentric flue gas evacuation systems (forced flue), the $C0_2$ content in the annular space in the measurement piping can also be checked. The flue gas evacuation installation is considered leak proof if the CO_2 content measured is lower than 0.2%.

6.1.1 Classification

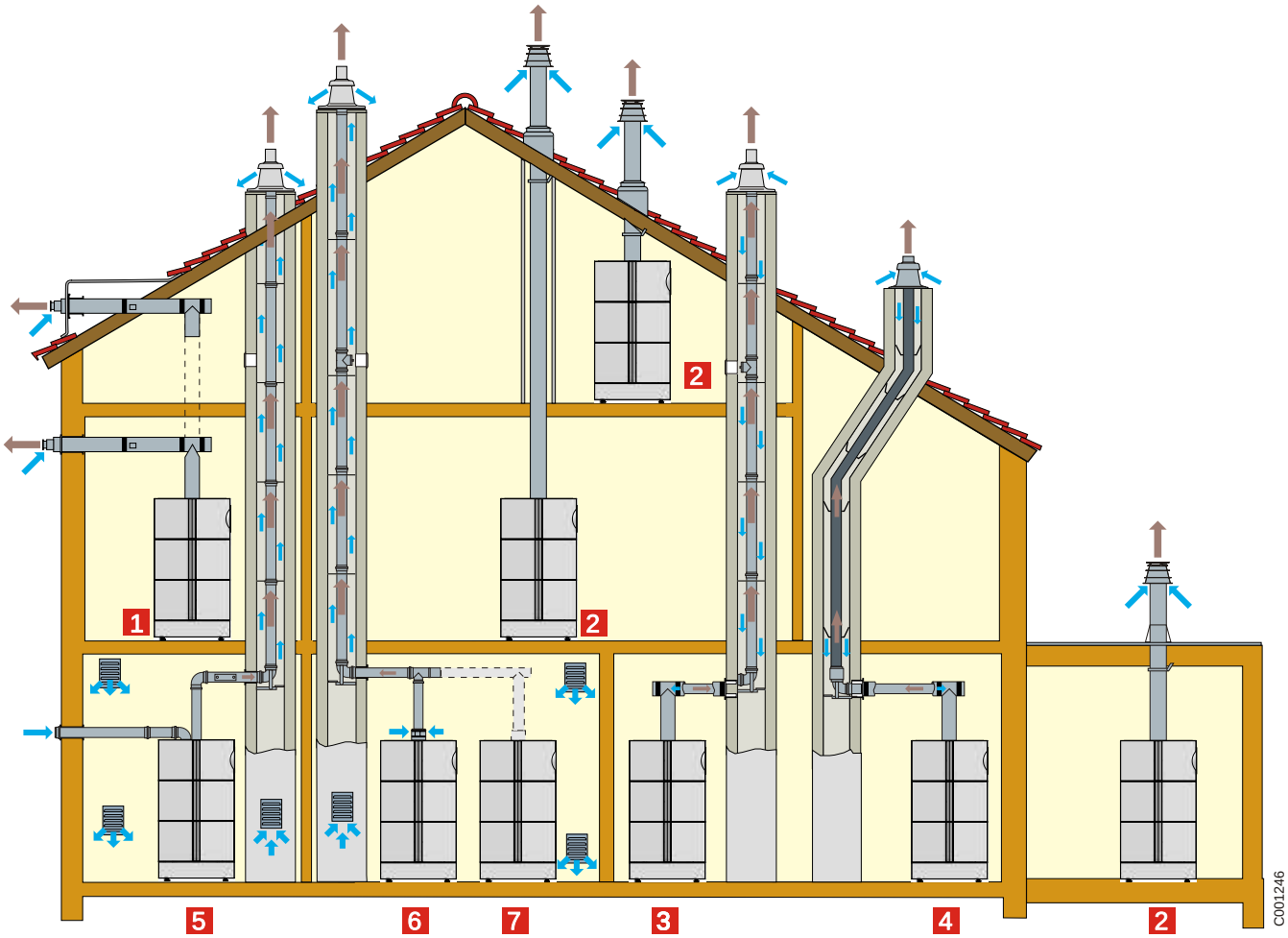

1 Flue type C_{13} :
Air/flue gas connection by means of concentric pipes to a horizontal terminal (so-called forced flue)

2 Flue type C_{33} :
Air/flue gas connection by means of concentric pipes to a vertical terminal (roof outlet)
or

3 Flue type C_{33} :
Air/flue gas connection by concentric pipes in the boiler room and single pipes in the chimney (combustive air in counter current in the chimney)
or

4 Flue type C_{33} :
Air/flue gas connection by concentric pipes in the boiler room and single "flex" in the chimney (combustive air in counter current in the chimney)

5 Flue type C_{53} :
Air and flue gas connection separated by means of a bi-flow adapter and single pipes (combustive air taken from outside)

6 Flue type B_{23P} :
Chimney connection (combustive air taken from the boiler room)

7 Flue type B_{23P} :
Cascade installation
Compulsory accessories:
Flue damper
For information about the connection to the electrical terminal block, refer to the instructions delivered with package AM3

6.1.2 Lengths of the air/flue gas pipes

Type of air/flue gas connection		Diameter	Maximum length of the connection pipes (metres)	
			Gas 110 Eco 65	Gas 110 Eco 115
Concentric pipes connected to a horizontal terminal (Alu)	C_{13}	100/150 mm	9	5.9
Concentric pipes connected to a vertical terminal (Alu)	C_{33}	100/150 mm	11.5	9.4
Concentric pipes in the boiler room Single pipes in the chimney (combustive air in counter current) (Alu)	C_{33}	110/150 mm 110 mm	11	10
Bi-flow adapter + Separate single air/flue gas pipes (combustive air taken from outside) (Alu)	C_{53}	100/150 mm on 2x100 mm	23	air: 11 flue gases: 5

⚠ Lmax is measured by adding the lengths of the air/flue gas pipes and the equivalent lengths of the other elements :

Alu Equivalent length in m	Diameter 100/150 mm	Diameter 100 mm
Elbow 87°	1.9	5.0
Elbow 45°	1.2	1.2
Elbow 30°	/	/
Elbow 15°	/	/
Inspection T	3.3	5.3
Right inspection tube	0.5	0.5

6.2 Electrical connection

The Gas 110 Eco 115 / 65 must have a fixed 230V - 50Hz single phase mains supply. It must be powered by a circuit containing a double pole switch with an opening distance 3 mm.

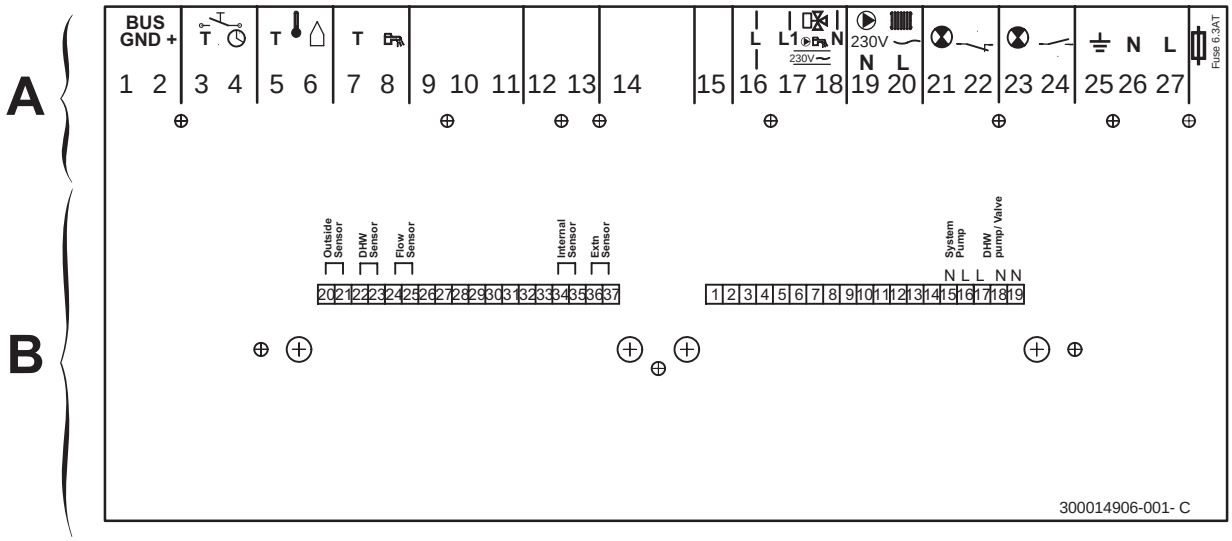

A.

1 / 2	0 - 10 V or modulating controller
3 / 4	On / Off (1st stage)
5 / 6	High / low (2nd stage) or outdoor sensor
7 / 8	DHW sensor or volt free thermostat
9	N.A.
10	Safety interlock (10 - 14)
11	N.A.
12 / 13	N.A.
14	Safety interlock (10 - 14)
15	
16	230 V Signal
17 / 18	DHW diverting valve or pump (max. 1 Amp)
19 / 20	Boiler pump or system pump (max. 1 Amp)
21 / 22	Common alarm volt free (opens on failure)
23 / 24	Boiler run volt free (closes on run)
25 / 26 / 27	Power supply
F3	6.3 A fuse

B. Optional Rematic connectors

15 / 16	System pump
17 / 18	DHW pump
20 / 21	Outdoor sensor
22 / 23	DHW sensor
24 / 25	Flow temperature sensor
34 / 35	Internal sensor
36 / 37	Extension timer

See Rematic fittings instructions for full details.

Access to the electrical connections

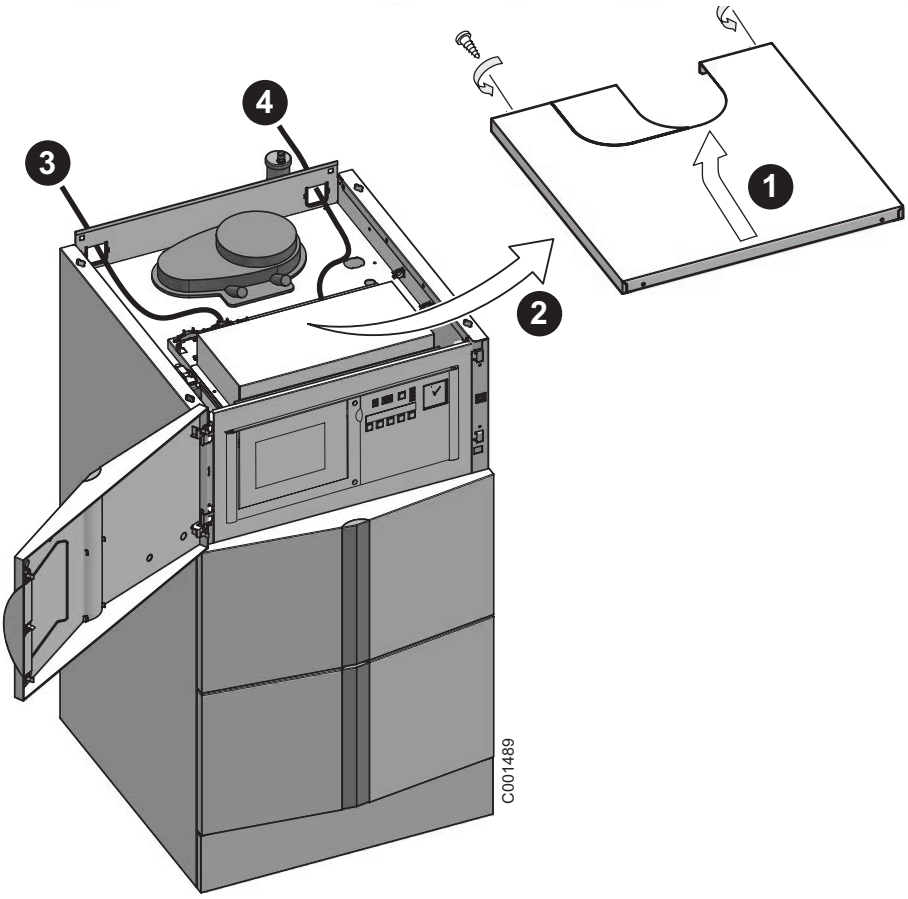

- Open the panel flap.
- ❶ Unscrew the 2 mounting screws at the back of the top panel. Lift and tilt the back of the top panel.
- ❷ Unscrew the 2 mounting screws from the screen. Remove the wiring cover.
- ❸ Pass the sensor cables through the opening in the rear panel.
- ❹ Pass the 230V cable through the opening in the rear panel.
- Attach the cables to the cable clamps provided for this purpose.
- Connect external wiring to the relevant terminal numbers.
- Follow in reverse order for re-assembly.

⚠ Check on the path of the cables when replacing the wiring cover.

7 Starting or restarting after a prolonged shutdown

⚠ Initial commissioning must be done by a qualified professional.

7.1 Filling the system

- Fill the installation with water.
- Bleed the heating installation.
- Fill the siphon with water.
- Operation while the condensation water siphon is empty may damage the boiler.
- Check the pressure of the installation:
  (Minimum pressure for Gas 110 Eco 65=0.3 bar,
  Minimum pressure for Gas 110 Eco 115=0.5 bar;
  Recommended pressure 1.5 bar;
  Maximum pressure 4 bar).
- Carry out a water tightness check.
- Top up with more water if necessary.

7.2 Check points before commissioning

7.2.1 Checking the gas supply pressure

- Close the gas valve.

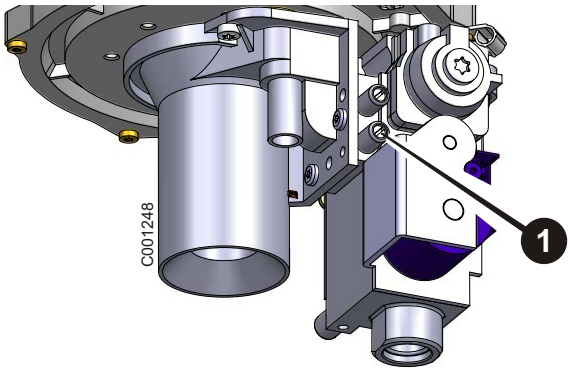

- ❶ Loosen the screw on the measurement connection by 2 turn.
- Connect the manometer.
- Open the gas valve.
- Check the pressure of the gas connection on the measurement connection. The boiler is preset in the factory to operate on natural gas.

⚠ If the pressure exceeds the authorised pressure range (natural gas G20 : 25 mbar - max 30 mbar, propane G31 : max 50 mbar), suspend commissioning.
Inform the gas supply company.

- Close the gas valve. Disconnect the manometer.
- Tighten screw ❶.
- Open the gas valve. Check the seal.

7.2.2 Setting the burner

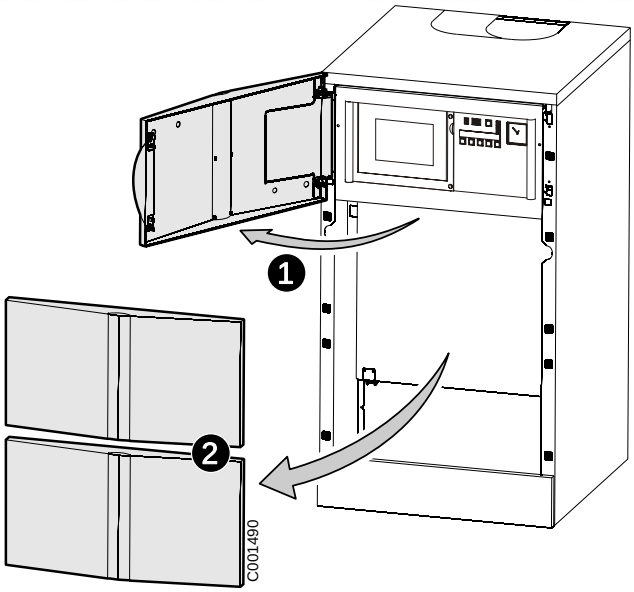

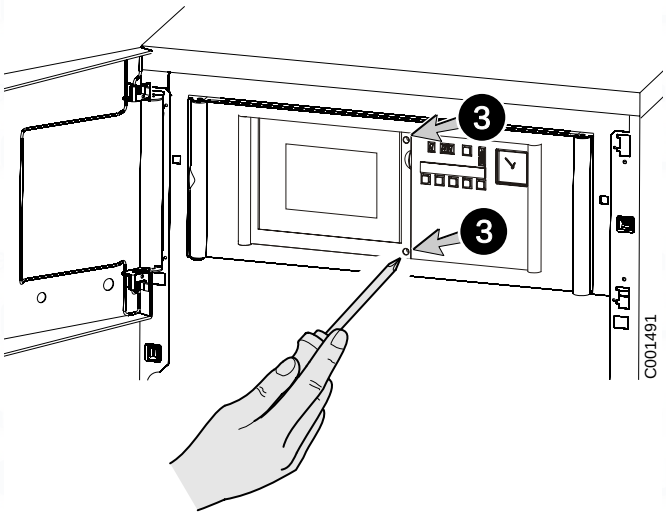

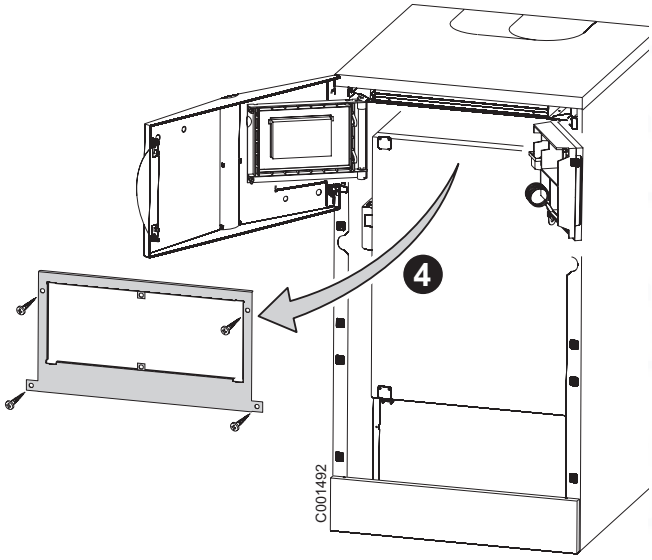

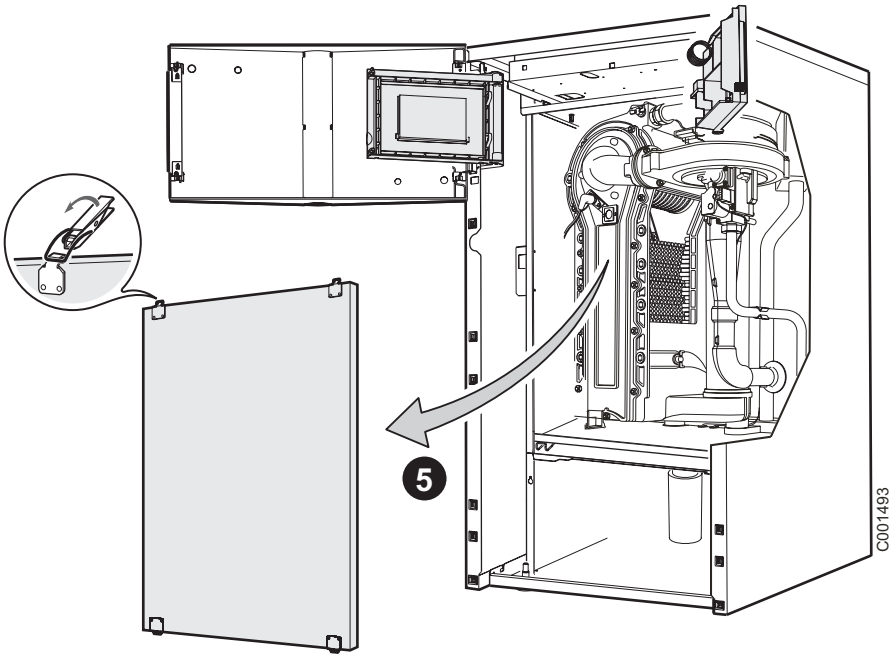

- Gas 110 Eco 65

The boiler is preset in the factory to operate on natural gas G20. Connection pressure (mbar) 20.

Maximum power of the burner (Factory setting in kW)

Boilers	Gas 110 Eco 65
Heating mode (100 %)	62.0 (net input)
Domestic hot water mode (100%)	62.0 (net input)

The burner is set exclusively by checking the CO_2 and O_2 content in the flue gases at maximum and minimum output.

Compare the information on the appliance's rating plate with the type of gas available in situ.

If this is natural gas, the boiler can be commissioned without making other settings.

- Re-establish power supply to burner and controls.
- Starting the burner up.

The appliance must be powered by a circuit containing a double pole switch with an opening distance 3 mm.

The earth connection shall comply with current regulations.

Take the boiler up to maximum power.

- Remove the top panel.
- Remove the plastic cap from the measurement tube.
- Check the CO_2 and O_2 content in the flue gases using the measuring device.

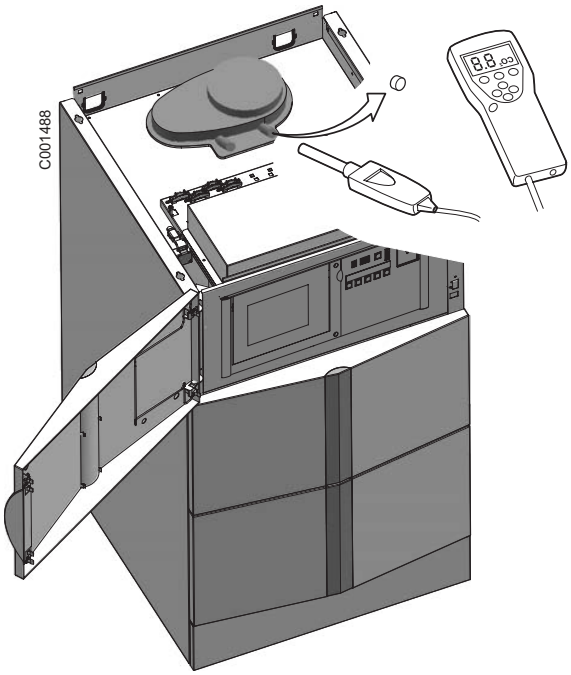

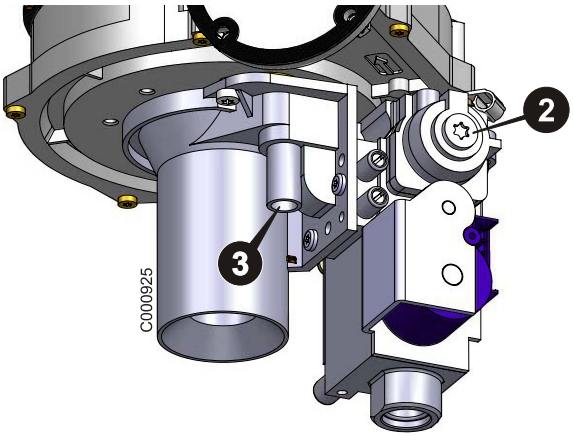

	CO_2 content (%)	O_2 content (%)
Gas 110 Eco	65	65
Natural gas H (G20)	9.0	4.8
Propane	10.7	4.8

Correct the burner setting to ±0.3% CO_2; ±0.5% O_2.

- Run the boiler at full-load by pressing "⊼" and [+]-keys simultaneously.
  H = Maximum power of the burner.
- Set the "max output" gas flow with the setting screw 3 until the required CO_2 and O_2 content is reached. Turn the screw anti-clockwise to increase the CO_2 and clockwise to decrease the CO_2.
- Check the CO_2 and O_2 content in the flue gases.
- Check the flame via the flame inspection window. It must not go out. The flame must be stable and blue in colour with orange particles around the edge of the burner.
- Set the burner output to minimum using the "⊼" and [-]-keys simultaneously.
  L : Minimum output.
- Measure the CO_2 or O_2 content in the flue gases.
- Modify the "min output" setting with the setting screw 2. Turn the screw clockwise to increase the CO_2 and anti-clockwise to decrease the O_2.
- Check the output delivered again.
- Adjust if necessary.

When the setting is correct:

- Press the [+] and [-]-keys simultaneously to return in operating mode.
- Remove the measuring equipment.
- Replace the plastic cap onto the measuring tube.

i Only make small adjustments 1/8 turns when adjusting max and min outputs (3 and 2).

- Gas 110 Eco 115

The boiler is preset in the factory to operate on natural gas G20.

Maximum power of the burner (Factory setting in kW)

Boilers	Gas 110 Eco 115
Heating mode (100 %)	111 (net input)
Domestic hot water mode (100%)	111 (net input)

The burner is set exclusively by checking the CO_2 or O_2 content in the flue gases at minimum output.

Compare the information on the appliance's rating plate with the type of gas available in situ.

- If natural gas G20 is being used, this boiler can be commissioned without making any other preliminary settings.

▶ Starting the burner up.

The appliance must be powered by a circuit containing a double pole switch with an opening distance 3 mm.

The earth connection shall comply with current regulations.

▶ Remove the top panel.
▶ Remove the plastic cap from the measurement tube.
▶ Check the CO_2 and O_2 content in the flue gases using the measuring device.

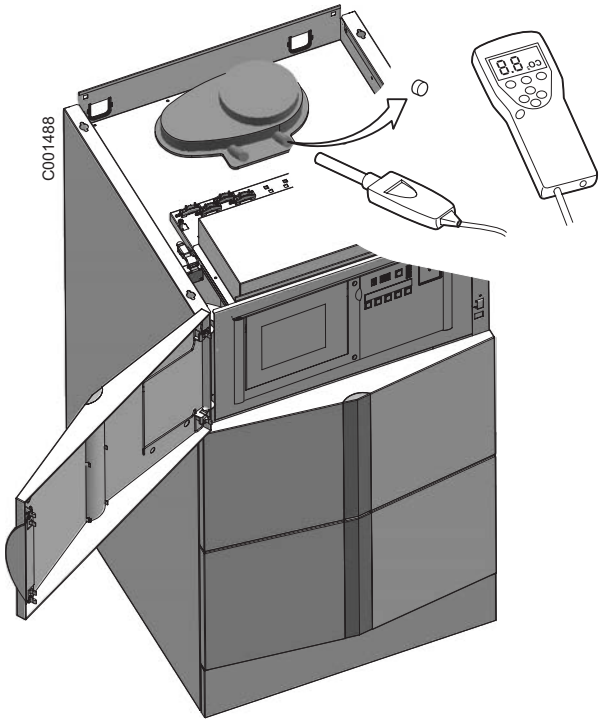

Take the boiler up to maximum power.

▶ Press key "⊕" and [+] simultaneously for 2 seconds
[H] = Maximum power of the burner.

[H]	CO_2 content (%)	O_2 content (%)
Gas 110 Eco	115	115
Natural gas G20	9	4.8
Propane	10	5.7

Check the burner setting to ±0.3% CO_2; ±0.5% O_2.

▶ Set the burner output to minimum using the "⊕" and [-] keys.
[L] : Minimum output.

[L]	CO_2 content (%)	O_2 content (%)
Natural gas G20	9.5	3.9
Propane	10.5	4.9

Correct the burner setting to ±0.1% CO_2; ±0.2% O_2.

▶ Measure the CO_2 or O_2 content in the flue gases.
▶ If necessary:
Modify the "min output" setting with the setting screw ❹ (The adjustment screw is protected by a plug, Torx type screw and plug).
Turn the screw clockwise to increase the CO_2 and anti-clockwise to decrease the CO_2.
▶ Check the CO_2 and O_2 content again at maximum output.

When the setting is correct:

▶ Press the [+] and [-]-keys simultaneously to return in operating mode.
▶ Remove the measuring equipment.

▶ Replace the plastic cap onto the measuring tube.

ℹ Only make small adjustments 1/8 turns when adjusting minimum outputs (4).

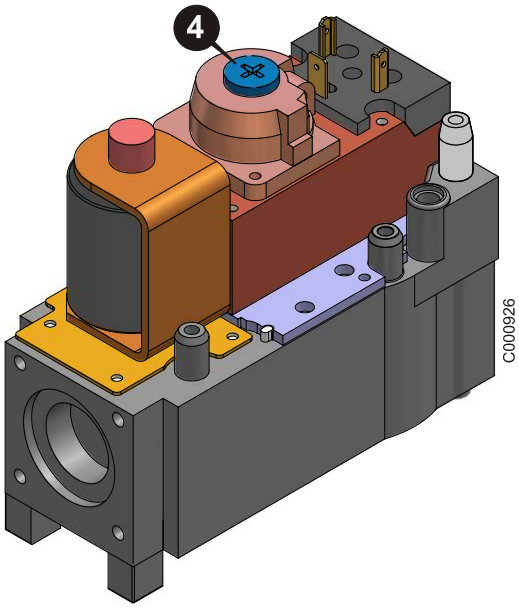

If the values exceed the tolerances:
Check the gas input pressure.
Check that the restrictor fitted is suitable for the gas being used (G20 = diameter 8.6, Propane = 6.7).

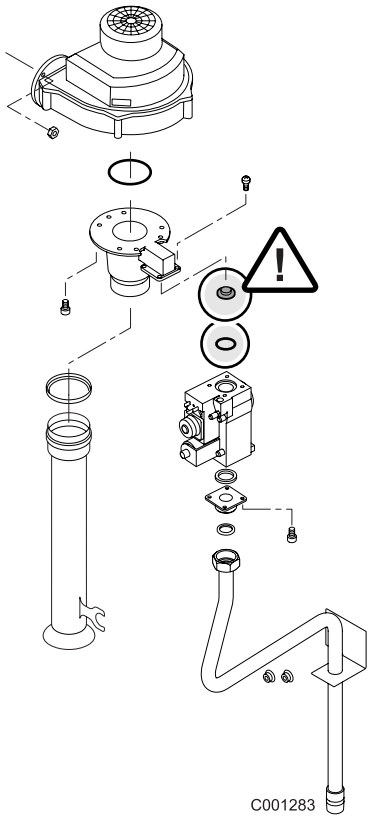

7.2.3 Programming boiler control

Set the integrated control in compliance with the corresponding operating instructions.

7.2.4 Instruct the user of the boiler

7.2.5 Shut-down

■ Temporary shut-down with frost protection

- Do not isolate the electric power supply.
- Do not close the gas cock.
- Use the switch function - sets controls to off: use ⊳⊳⊳-key and -symbol.

See chapter 4.1.3

■ Permanent shut-down without frost protection

- Set system controls to off.
- Isolate the electric power supply.
- Close the gas cock.
- Drain the system.

8 Fault-finding

8.1 General (all installations)

Check the following, in sequence (by service engineer).

Step	Signs	Check points	Actions
1	Boiler display is blank	The mains voltage 230 V	Replace fuse if necessary, but check what circuit it was protecting and rectify if faulty.
		Fuse F3 on electric connector	
		The control box fuses	
2	Boiler display shows a fault code	For flashing digits	If yes, follow instructions in the table § 8.2
3	Boiler display shows operating code § 4.3	0 (no heat demand)	Go to point 4.
		1 to 9, H, L, b	Try to find the cause of the fault, using operating mode shown.
4	Use boiler manual override § 4.1.3	Does the boiler start up?	Yes, check external control and wiring, or go to point 6.
			No, go to point 5.
5	Override external controls by fitting a link across terminals 3 and 4 of the boiler terminal strip	Does boiler start up?	Yes, check boiler parameters. If all OK, then replace control box.
			No, repeat point 3, or go to point 6.
6	With the Celcia MC4 or another OpenTherm controller: Check the communication between controller and boiler with the aid of the "code" window and window on the control panel	Under the normal operating condition, press the "⇕" - key for 2 seconds: does the top part not flash in the code window?	Communication (connection) with the control unit is not in order or the control unit is defective.
		Under the normal operating condition, press the "⇕" - key for 2 seconds: does the top part not flash in the window?	Communication with the controller is not in order or the control unit is defective or the controller is defective.
	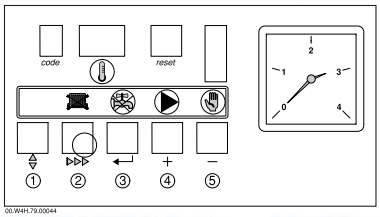	Is nothing flashing?	Replace the control unit.
7	Investigate boiler settings and wiring	Check the parameter settings of the boiler	If all is correct, replace the control box.
		Check the wiring on the boiler terminal strip and to the control box	

8.2 Fault codes

In the event of an error message, both the "code"-display and the ⓘ-display will flash.

See Table next page for details.
§ 4.9 for readout of the most recent faults.

Before resetting, accurately record the fault code (including figures, flashing digits and dots) and remember to pass on this informtion when seeking assistance. The fault code is important for correctly and rapidly tracing the nature of the fault.

NOTE: Shutt-off mode (code b, only dots in ⓘ-display are flashing, not digits) is a normal boiler operating function and does not represent a boiler failure. However, this may indicate a system problem, an internal fan check or an incorrect parameter setting.

Code	Description	Cause/check points and remedy
00	Flame simulation	- Gas valve shuts but burner surface continues to glow due to incorrect combustion. - Gas valve off but leaking on shut-down - burner flame continuing.
01	Short circuit 24 V	Check wiring.
02	No flame or no ionisation (after 5 start attemps) Note: Ionisation measurement in Volts between terminal 4 and earth § 10.2.4 (1 V dc ≡ 1µA dc)	a. No ignition spark, check: - connection of ignition cable and spark plug cap - ignition cable and electrode for insulation breakdown - electrode gap ; must be 3-4 mm - earth continuity b. Ignition spark, but no flame, check if: - gas cock is open - inlet gas pressure is sufficient - gas pipe is vented - gas valve is energised during ignition and also opens - electrode is fitted properly, is clean and set - the gas/air ratio is correct § 7.2.2 - the gas pipe is not clogged or incorrectly sized - the air supply and flue outlet is free of obstructions - if the condensate siphon is clear - there is no flue gas recirculation (internal/external) c. Flame, but no or insufficient (<2 µA) ionisation, Visual check of flame: - is flame core visible? - is flame pattern stable? - check CO_2 at both part and full flame - check ignition probe earthing - check temperature sensors for loss current (humidity on sensors) - is analog control (0 - 10 V) volt free? Visual check of ignition/ionisation probes: - check distance between both probes, i.e. 3 to 4 mm - remove ceramic fibers between the burner and the ionisation electrode - clean if required
04		Voltage failure after lock out condition - original lock out cause will not be displayed - check read out table for additional fault code § 4.9
05	External influence	Power or control supply affected by external EMC - check for EMC conformity
08	Setting failure	Check parameter d (second digit must be 0)
11	Failure of internal communication bus	- Short circuit in flat cable: replace flat cable - Water/condensation on display - Possibly external EMC contamination
12	Safety interlock	- Fuse F2 of the Comfort Master is defective
18	Flow temperature too high	Check: - the waterflow § 5.3 - system for trapped air - sensors for resistance at set temperature Table § 10.5 - if the boiler is full of water (minimum pressure 0.8 bar)
19	Return temperature too high	

24.	Return temp > flow temp	- Flow sensor badly installed - Pump operating in wrong direction or flow and return connections crossed
28.	Fan not running	- Fan or motor failed - Supply and/or signal control cable - poor connections or failed
29.	Fan runs continuously or speed signal not correct	- Check control cable connections and for continuity - Fan defective - Flue draft conditions too high
31.	Temperature sensor failure	Flow temperature sensor short circuit
32.		Return temperature sensor short circuit
34.		Outside temperature sensor short circuit
36.		Flow temperature sensor not connected or open circuit
37.		Return temperature sensor not connected or open circuit
40.	Setting failure	Check parameter d.
77.	Ionisation failure during boiler operation	After 4 restarts during one heat demand - flue gas recirculation (internal/external) - insufficient air flow - check fan or air inlet/flue outlet for obstruction - insufficient gas flow - incorrect combustion
Other codes	Control box failure	- Press the "reset"-key - If fault returns, check wiring for short circuits - If faults still return, replace the control box Shut-off codes § 4.4

9 Adapting to another gas

These actions must be carried out by a qualified engineer holding the relevant qualifications and certificates (for example ACS and IEE regulations).

9.1 Switching from Natural Gas to Propane

■ Gas 110 Eco 65

Changing from Natural Gas to Propane requires :

- the setting of the burner,
- the setting of the maximum fan speed.

- Isolate main power supply.

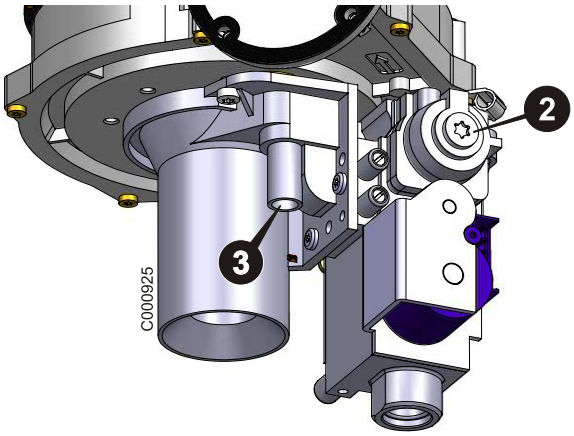

- Preset the burner by turning the "max output" setting screw ❸ :
  - by 4 turns to the right : Gas 110 Eco 65
- Re-establish power supply to burner and controls.
- Set the maximum fan speed to a value of :
  - 4600 rpm : Gas 110 Eco 65

See chapter 4.6.3 and § 4.6.4 for speed at full load HTG and DHW

- Take the boiler up to maximum power.
  - Press key "⇕" and [+] simultaneously for 2 seconds.
    H : Maximum power of the burner
- Remove the plastic cap from the measurement tube.
- Measure the CO_2 or O_2 content in the flue gases.
- Set : CO_2 to 10.7 ±0.3% or O_2 to 4.8 ±0.2%.
- Check the flame via the flame inspection window. It must not go out. The flame must be stable and blue in colour with orange particles around the edge of the burner.
- Press "⇕" and [-]-keys simultaneously.
  L : Minimum output.
- Measure the CO_2 or O_2 content in the flue gases.
- Modify the "min output" setting with the setting screw ❷.
- Check the output delivered again.
- Adjust if necessary.

When the setting is correct:

- Press the [+] and [-]-keys simultaneously to return in operating mode.
- Remove the measuring equipment.
- Replace the plastic cap onto the measuring tube.

Only make small adjustments 1/8 turns when adjusting max and min outputs (3 and 2).

■ Gas 110 Eco 115

Changing from Natural Gas to Propane requires :

- Installing the conversion kit (fitting instructions in kit),
- the setting of the burner,
- the setting of the maximum fan speed.

- Isolate main power supply.
- Put the gas block and restrictor in place

  See Assembly instructions, Propane conversion kit.
- Re-establish power supply to burner and controls.
- Set the maximum fan speed to a value of :
  - 6700 rpm : Gas 110 Eco 115

  See chapter 4.6.3 and § 4.6.4 for speed at full load HTG and DHW
- Take the boiler up to maximum power.
  - Press key "⇕" and [+] simultaneously for 2 seconds.

    H : Maximum power of the burner
- Remove the plastic cap from the measurement tube.
- Measure the CO_2 or O_2 content in the flue gases.

  See Table page 40
- Check the flame via the flame inspection window. It must not go out. The flame must be stable and blue in colour with orange particles around the edge of the burner.
- Press "⇕" and [-]-keys simultaneously.

  L : Minimum output.
- Measure the CO_2 or O_2 content in the flue gases.
- Modify the "min output" setting with the setting screw 4.

  See Table page 40

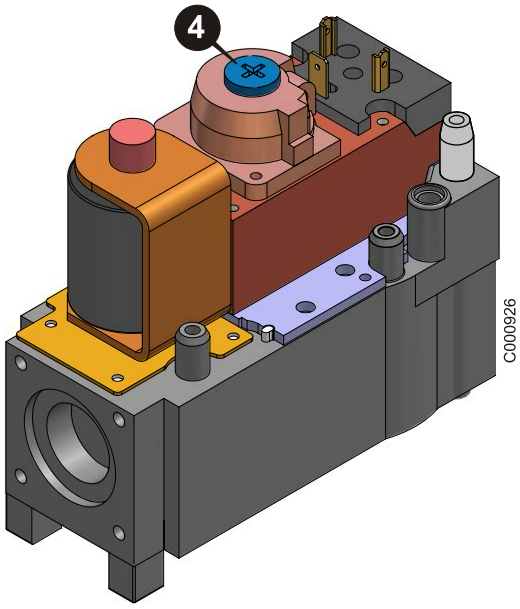

- Check the output delivered again.
- Adjust if necessary.

When the setting is correct:

- Press the [+] and [-]-keys simultaneously to return in operating mode.
- Remove the measuring equipment.
- Replace the plastic cap onto the measuring tube.

9.2 Gas type

Affix the adjusted for sticker which can be found in the LPG conversion pack and indicate for which type of gas the boiler is fitted and set to.

10 Maintenance

10.1 General

The boiler requires little maintenance if it is correctly set. The boiler only requires an annual check and cleaning if necessary.

10.2 Inspection

The annual inspection of the boiler can be restricted to the following operations:

- Measure the combustion and check the operation
- Clean the siphon
- Checking condensates discharge
- Checking the ignition electrode and the ionization sensor
- Set the gap between the ignition electrodes : 3 to 4 mm
- Check the general condition of the flue
- Checking the hydraulic pressure
  (minimum 0.3 bar for Gas 110 Eco 65,
  minimum 0.5 bar for Gas 110 Eco 115).
  Add water to the installation if necessary (Recommended pressure : 1.5 mbar)
- Check the ionization current : 4 to 9 µA.

10.2.1 Checking the combustion in the boiler

This check can be carried out by measuring the CO_2/O_2 content of the combusted gas at the measurement point.

Bring the boiler to maximum output up to a water temperature of around 70°C.

Boilers	Fan speed					Natural gas G20		Propane	
	rpm					O_2	CO_2	O_2	CO_2
	Maximum output		Minimum output	Start-up output		%	%	%	%
	Natural gas	Propane		Natural gas	Propane				
Gas 110 Eco 65	approx. 5200	approx. 4600	approx. 1200	2500	2500	4.8 ± 0.2	9.0 ± 0.3	4.8 ± 0.2	10.7 ± 0.3
Gas 110 Eco 115	approx. 7000	approx. 6700	approx. 1300	2500	2000	4.8 ± 0.2	9.0 ± 0.3	5.7 ± 1	10 ± 0.7

Correct the burner setting to ±0.3% CO_2; ±0.2% O_2.

The temperature of the combusted gases can also be measured at the measurement point in the evacuation pipe. The temperature of the combusted gas must not exceed the temperature of the return water by more than 30 °C. If it turns out that boiler combustion has not been optimised after this check, clean the installation.

10.2.2 Setting the ignition electrode

- Check the setting of the ignition electrode. Set the gap between the ignition electrodes : 3 to 4 mm.

10.2.3 Checking the hydraulic pressure

The hydraulic pressure must be a minimum of:

- 0.3 bar for Gas 110 Eco 65,
- 0.5 bar for Gas 110 Eco 115.

We recommend filling the installation to around 1.5 bars higher than the static height.

10.2.4 Checking the ionization current

Check ionisation level, minimum 4 µA dc (ionisation measurement in Volts between terminal 4 and earthing, 1 V dc ≡ 1µA dc). If ionisation level < 2µA dc or not present, check:

- Is flame shape stable and colour as described in commissioning instructions
- Check ignition probe earthing
- Check or replace ignition probe.

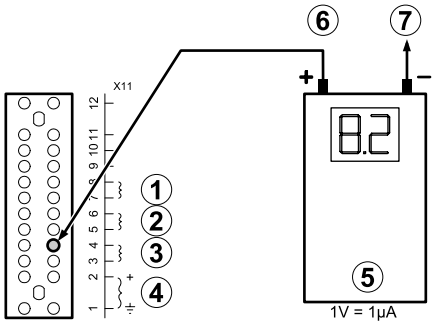

1	DHW sensor
2	Outdoor sensor / B2 (or high / low)
3	B1 (On/Off)
4	Modulating room control
5	Measuring range V (≡) (1 V DC= 1µA)
6	To terminal 4 of terminal strip
7	To earth clamp in instrument panel

10.3 Cleaning and maintenance

Before any operation, ensure that:
- The mains supply is disconnected,
- The gas supply is shut off,
- The boiler is hydraulically isolated and drained (if necessary).

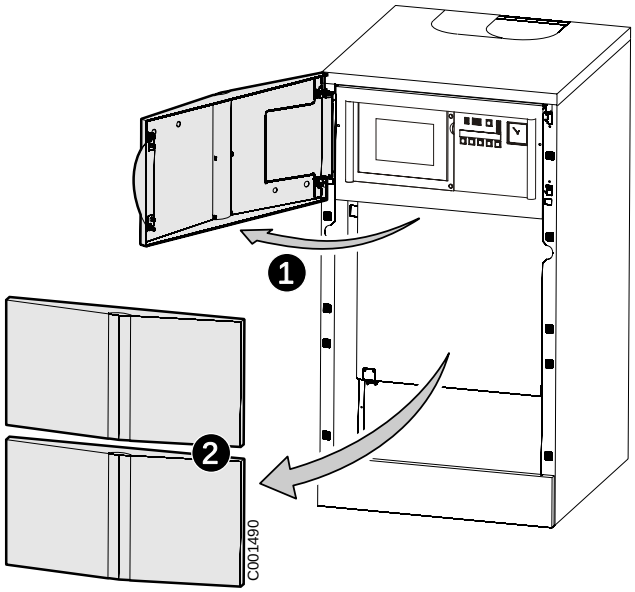

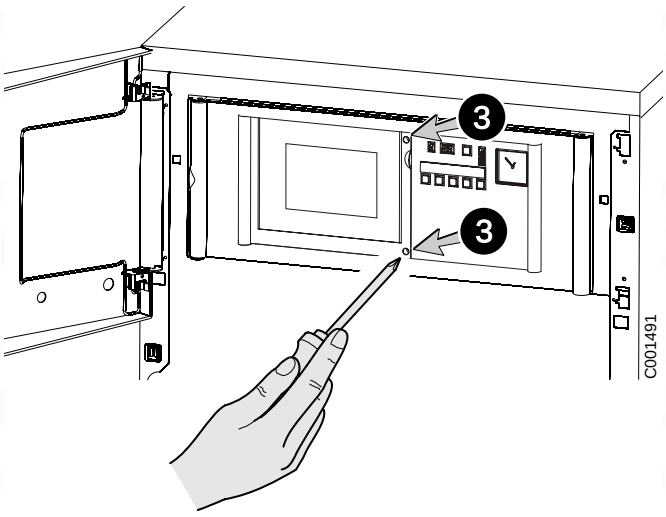

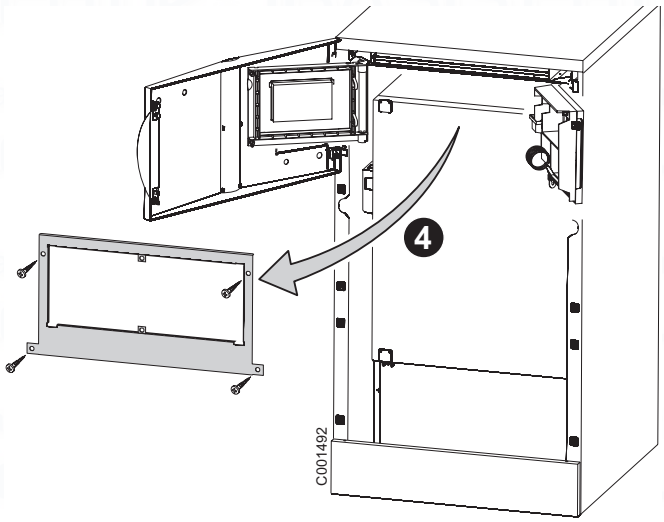

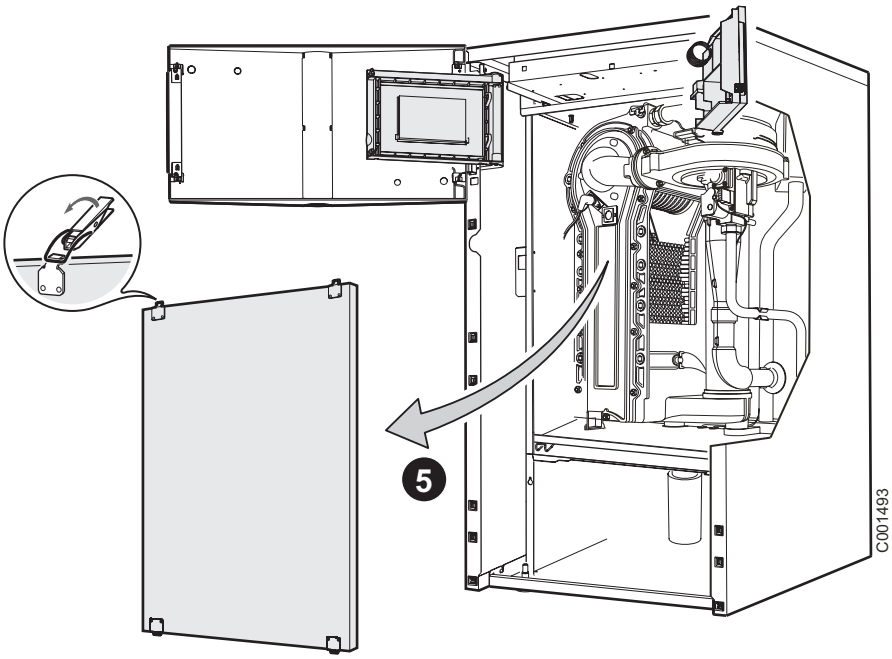

Operational mode

If the boiler requires cleaning, carry out the following maintenance operations :

- Open the heating body,
- Clean the burner,
- Clean the heat exchanger using the tool provided,
- Clean the fan,
- Clean the siphon,
- Close the heating body,
- Measure the combustion.

Opening and closing the heating body

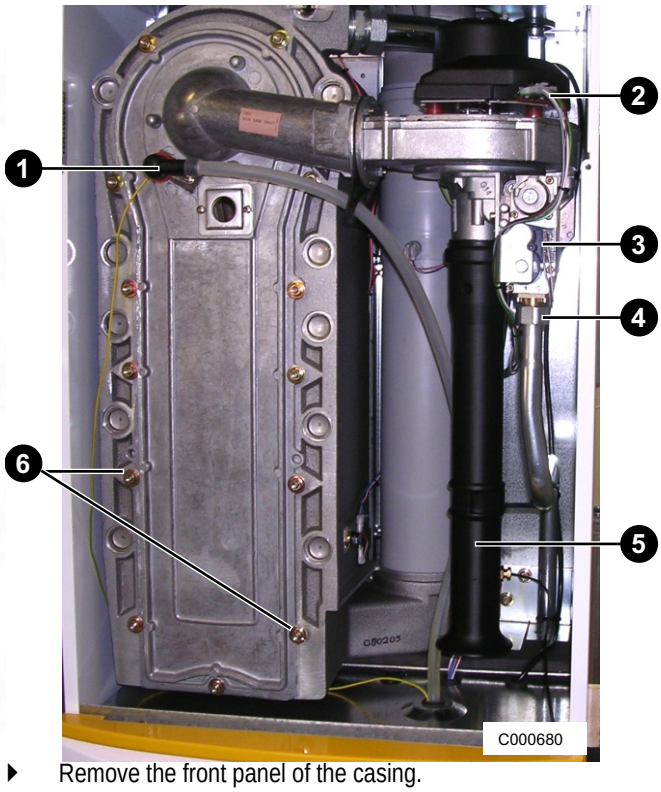

- Remove the front panel of the casing.
- Disconnect the following electrical connections:
  - Ionization probe Ht lead and earth cable ❶,
  - Fan ❷,
  - Gas block ❸.
- Unscrew the gas valve joint ❹.
- Take out the air inlet silencer ❺.
- Unscrew the 13 holding nuts on the inspection hatch ❻.

⚠ There is a 230 V electricity supply at the back of the fan which must be disconnected (Marker ❼).

⚠ If the inspection hatch seal remains stuck, it is necessary to replace it.

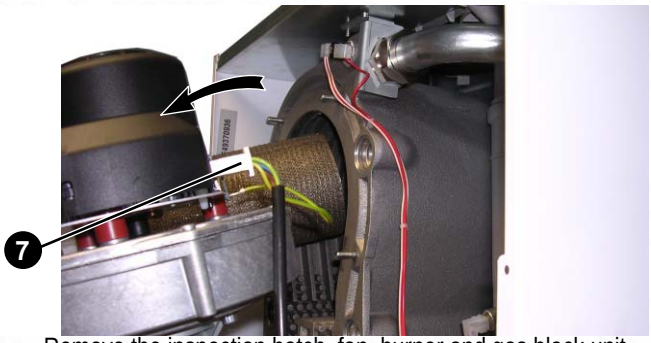

- Remove the inspection hatch, fan, burner and gas block unit.
  - Tilt the top of the unit until the burner comes out completely,
  - Then remove the inspection hatch, the fan and the gas valve unit.
- Carry out the cleaning operation.
- Connect the rear connector before putting the hatch back in place.
- Close the heating body following the above procedure in reverse order.

Cleaning the burner

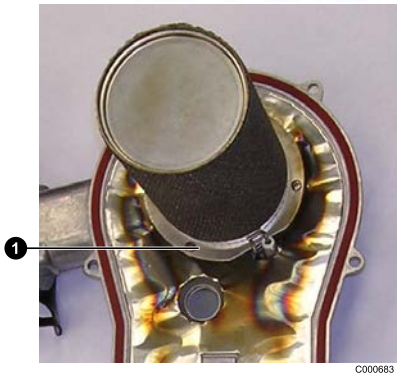

- Remove the 3 screws and the 3 holding lugs on the burner ❶.
- Remove the burner.
- Carry out a visual check on the general appearance of the burner.
- Carefully clean the burner with compressed air.
- Put the burner and its fastenings back in place.
- Replace radiation cover if required.

Cleaning the heat exchanger

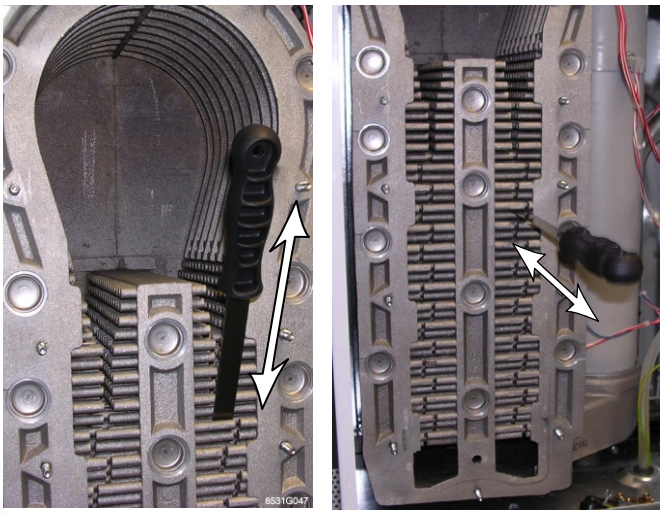

C000684

Specific tools:
Cleaning tool

See chapter Spare parts
Gas 110 Eco 65: Ref. 83, Reference: 52484,
Gas 110 Eco 115: Ref. 483, Reference: 58286.

- Clean inside the exchanger using the specific tool.
- Remove the residues from the bottom of the exchanger.
- Rinse with water jet until the water in the siphon runs clean.
- Check that there are no residues in the bottom of the exchanger.

Cleaning the fan

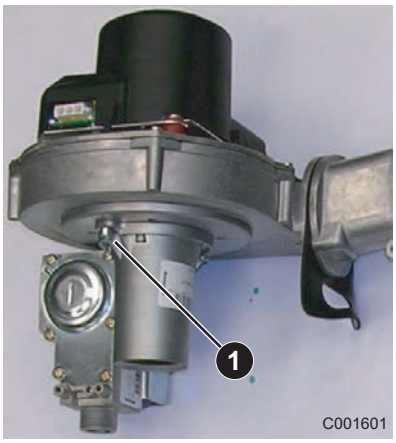

- Unscrew the 2 screws at the bottom of the fan ❶.
- Remove the venturi.
- Clean the fan with a nylon brush (do not disturb balancing clips).
- Check that the openings are clear and that the impellers turn easily.
- Re-assemble the fan.

Cleaning the siphon

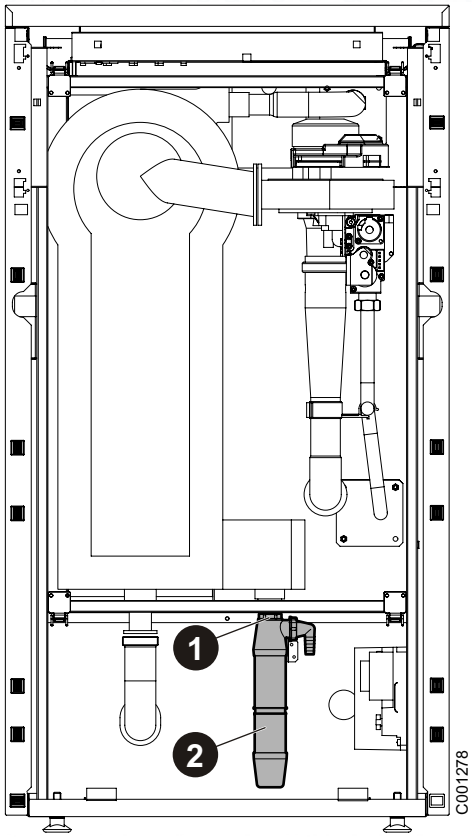

Gas 110 Eco 65:

- Unscrew the nut on the siphon from underneath the boiler ❶.
- Turn the siphon 90° to the front to dislodge it from the support lug.

Gas 110 Eco 115:

- Unscrew the siphon from the siphon body from underneath the boiler ❷.
- Turn the siphon 90° to the front to dislodge it from the support lug.
- Put the siphon back in place on the support lug.
- Carefully remove the siphon under the boiler (Danger of splashing).
- Clean the siphon with water.
- Fill the siphon with water.
- Re-assemble the siphon.
- Put the siphon back in place on the support lug.

The siphon must always be filled with water (Risk of damage to the boiler).

Setting the burner

See chapter Starting or restarting after a prolonged shutdown, Setting the burner.

10.4 Maintenance of the air/flue gas drain connection flues

The connection pipes must be checked at least once a year.

- Check the seals.
- Check the condensates evacuation pump in the boiler and on the pipe if used.
- Replace the leakproof seals and sections of pipe if these no longer offer a perfect guarantee of leak tightness after being dismantled during a maintenance operation (only for the visible part of the flue).

10.5 Temperature sensor

The resistance values at the various temperatures are indicated in the tables on the next page.

If a faulty sensor is detected, it is possible to check the resistance at the various temperatures using a meauring device with a corresponing measurement range (e.g. a multimeter). In order to obviate incorrect measurements, the sensor must be disconnected from the connector bar in the boiler distribution panel.

■ Resistance of the NTC 12 sensor kOhm (boiler water, boiler return water, flue gases)

Temperature °C	Resistance ohm	Temperature °C	Resistance ohm
10	22800	60	3250
20	14770	70	2340
30	9800	80	1710
40	6650	90	1270
50	4610		

11 Schematic diagrams

■ Safety box

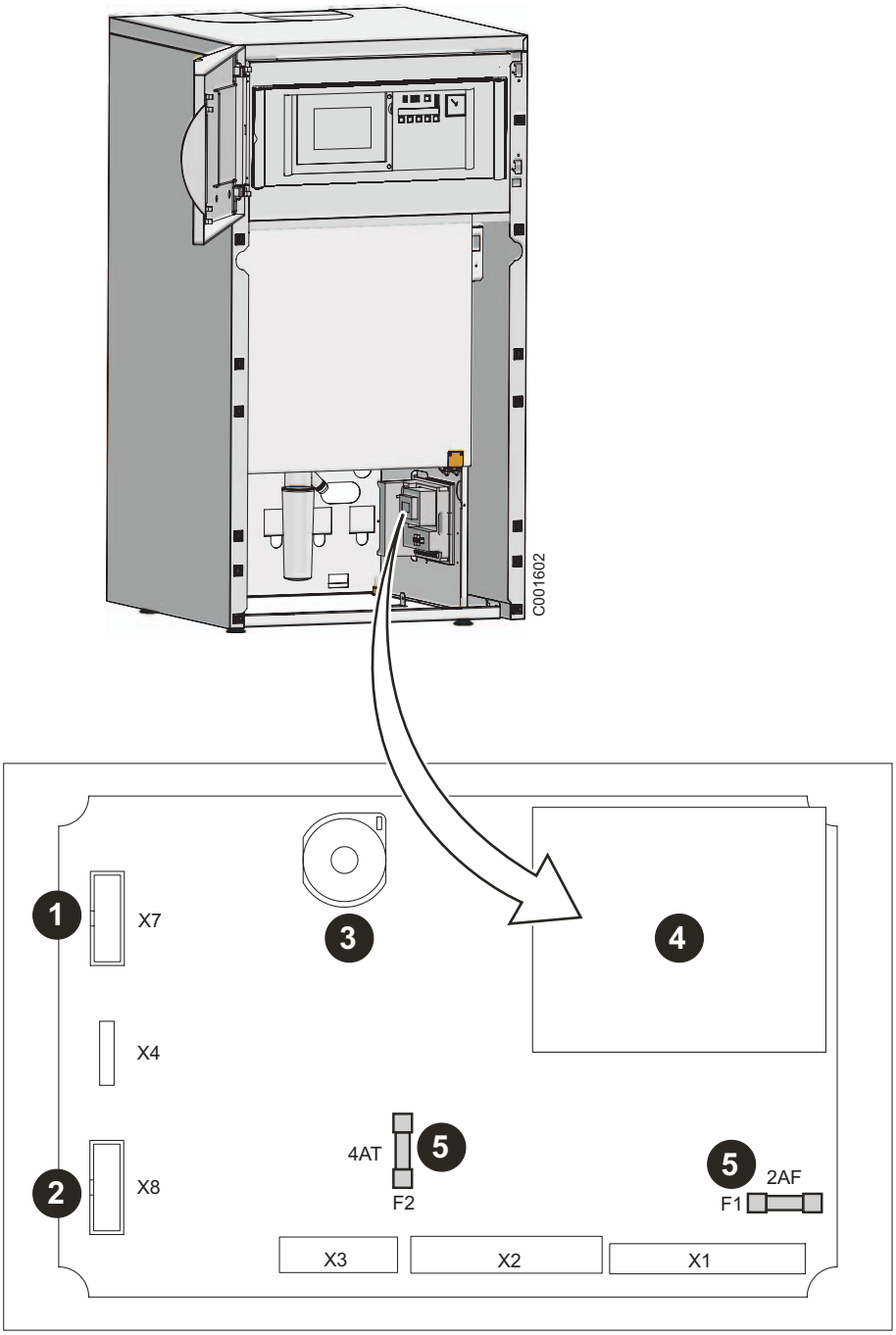

1. Operation
2. Display (Not used)
3. Ignitor + Ionization probe
4. Transformer
5. Fuse

Fuse	Protection	Function protected
F1	2 AF (quick)	230 Volt Safety box
F2	4 AT (slow)	24 Volt Safety box
F3 (on electric connector)	6.3 AT (slow)	Power supply

■ Skeleton Diagrams

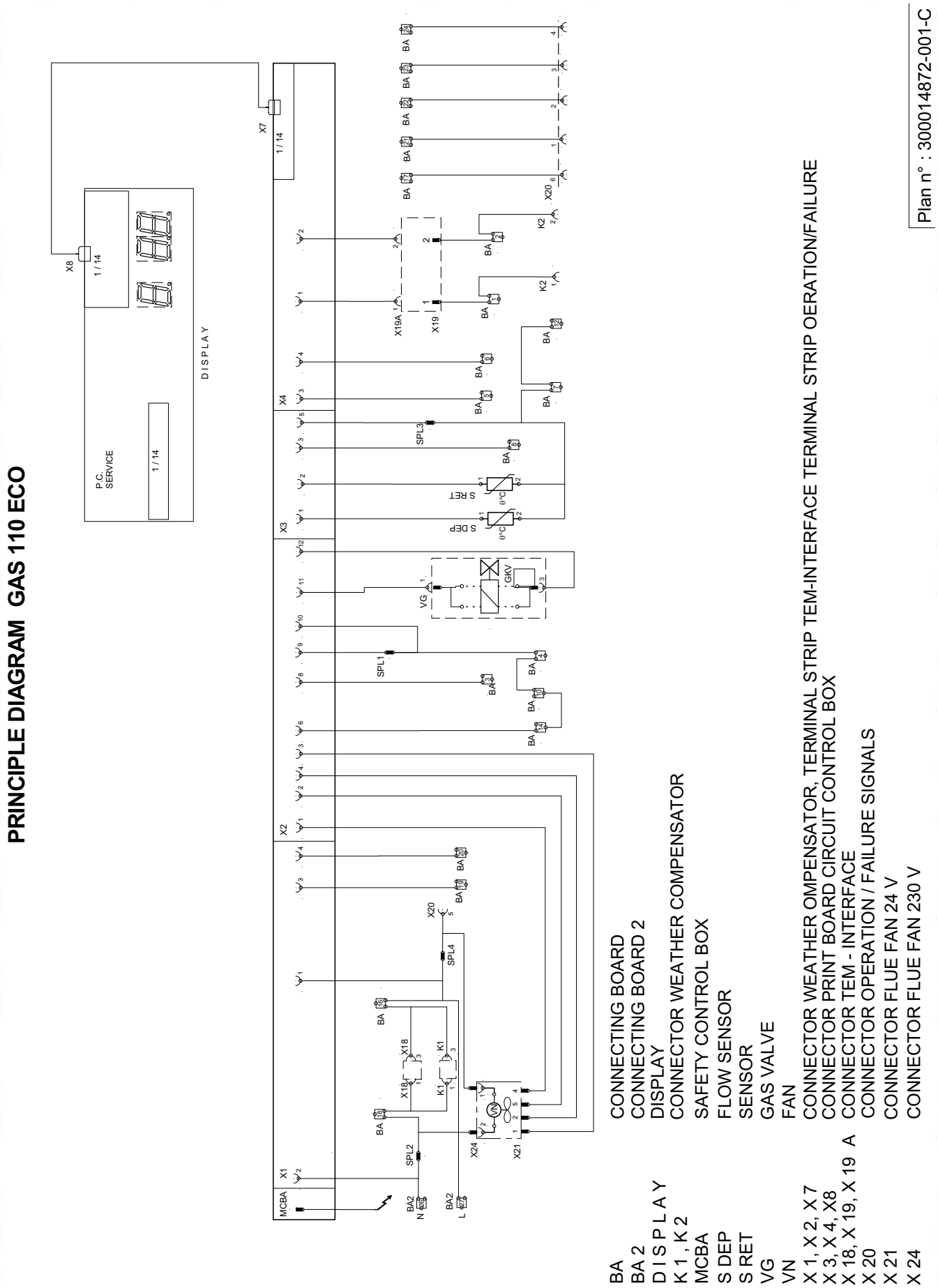

12 Spare parts - Gas 110 Eco 115 / 65

26/01/2009 - 300014883-002-C

To order a spare part, give the reference number shown on the list.

Boiler body Gas 110 Eco 65

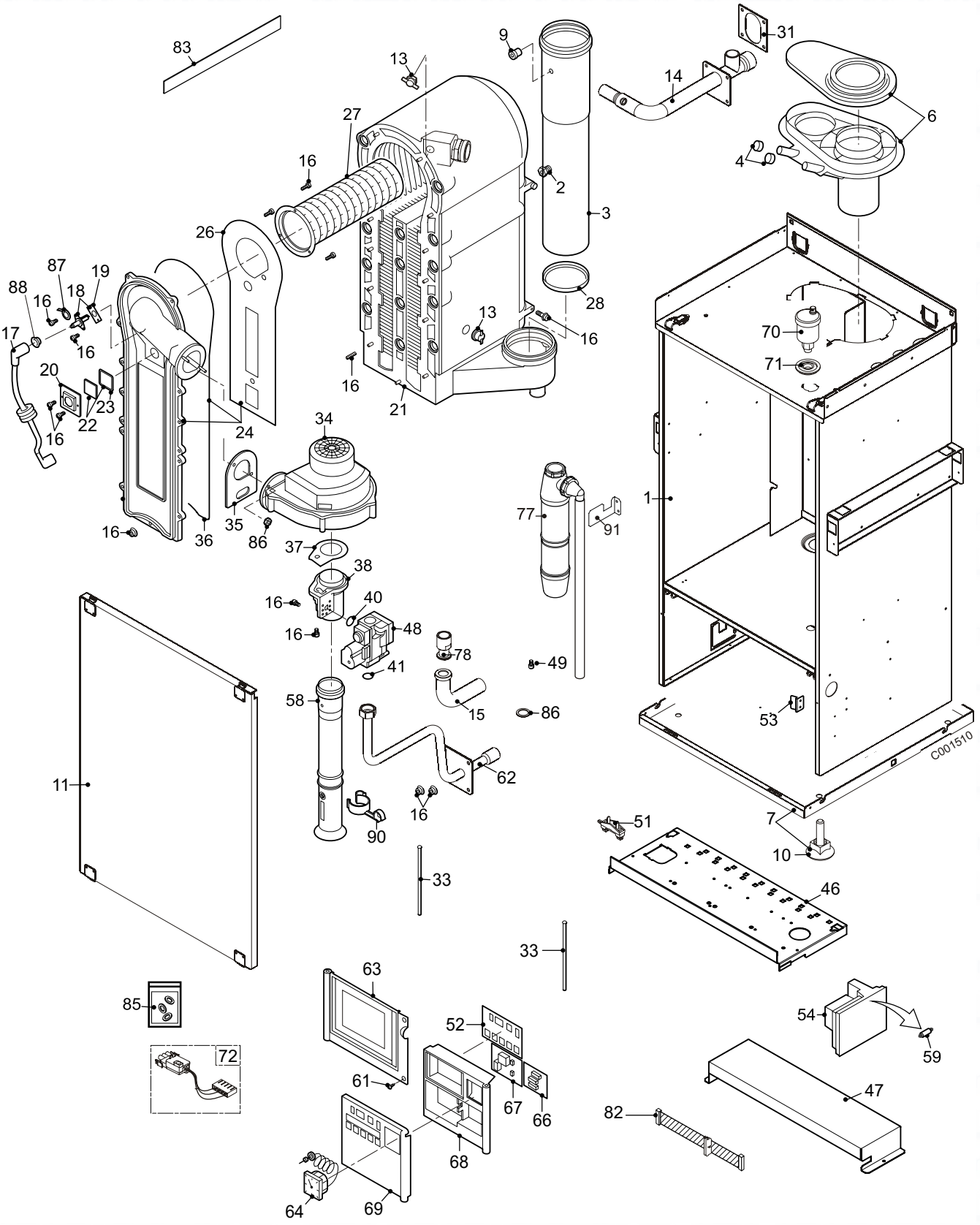

Casing Gas 110 Eco 65

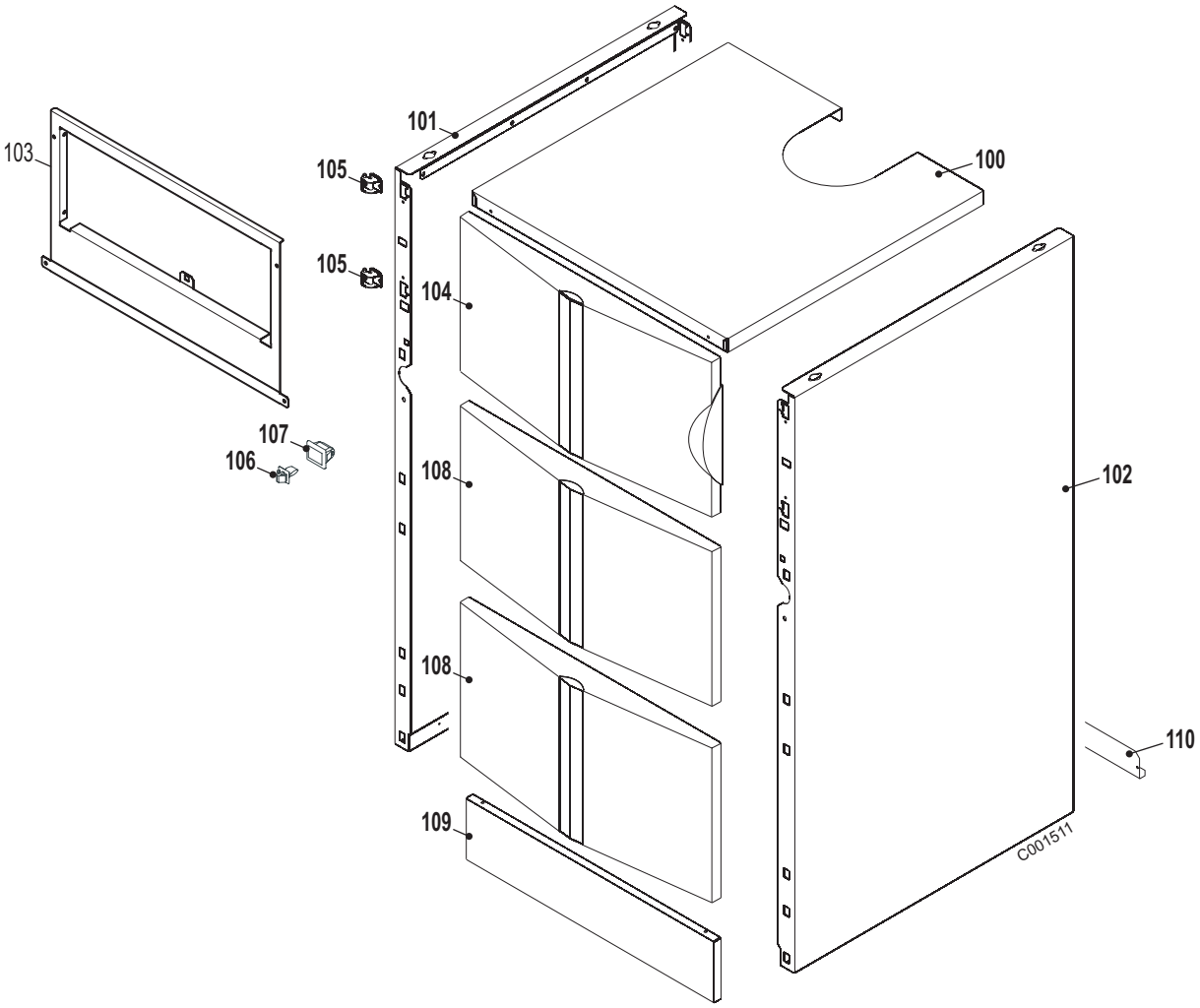

Boiler body Gas 110 Eco 115

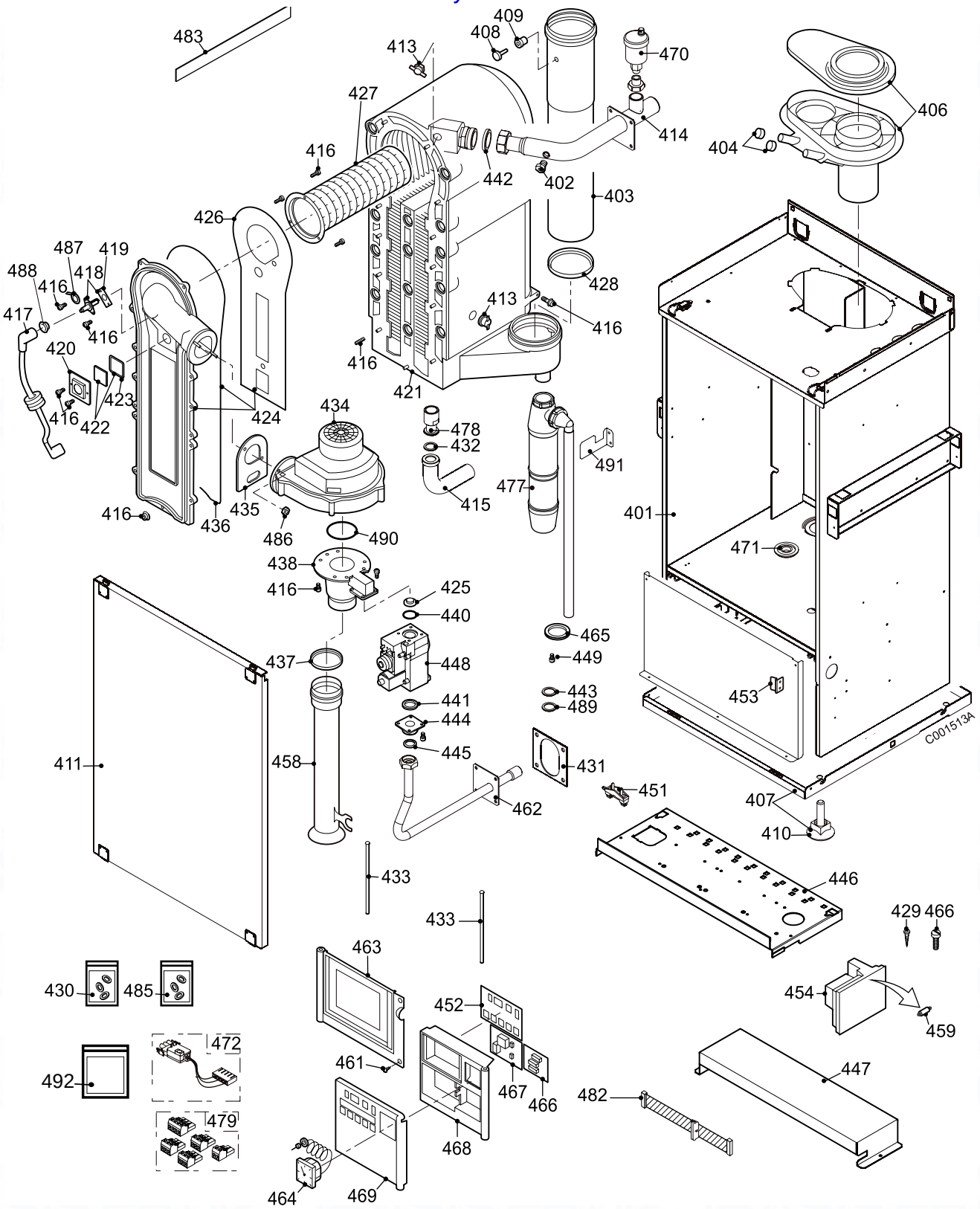

Casing Gas 110 Eco 115

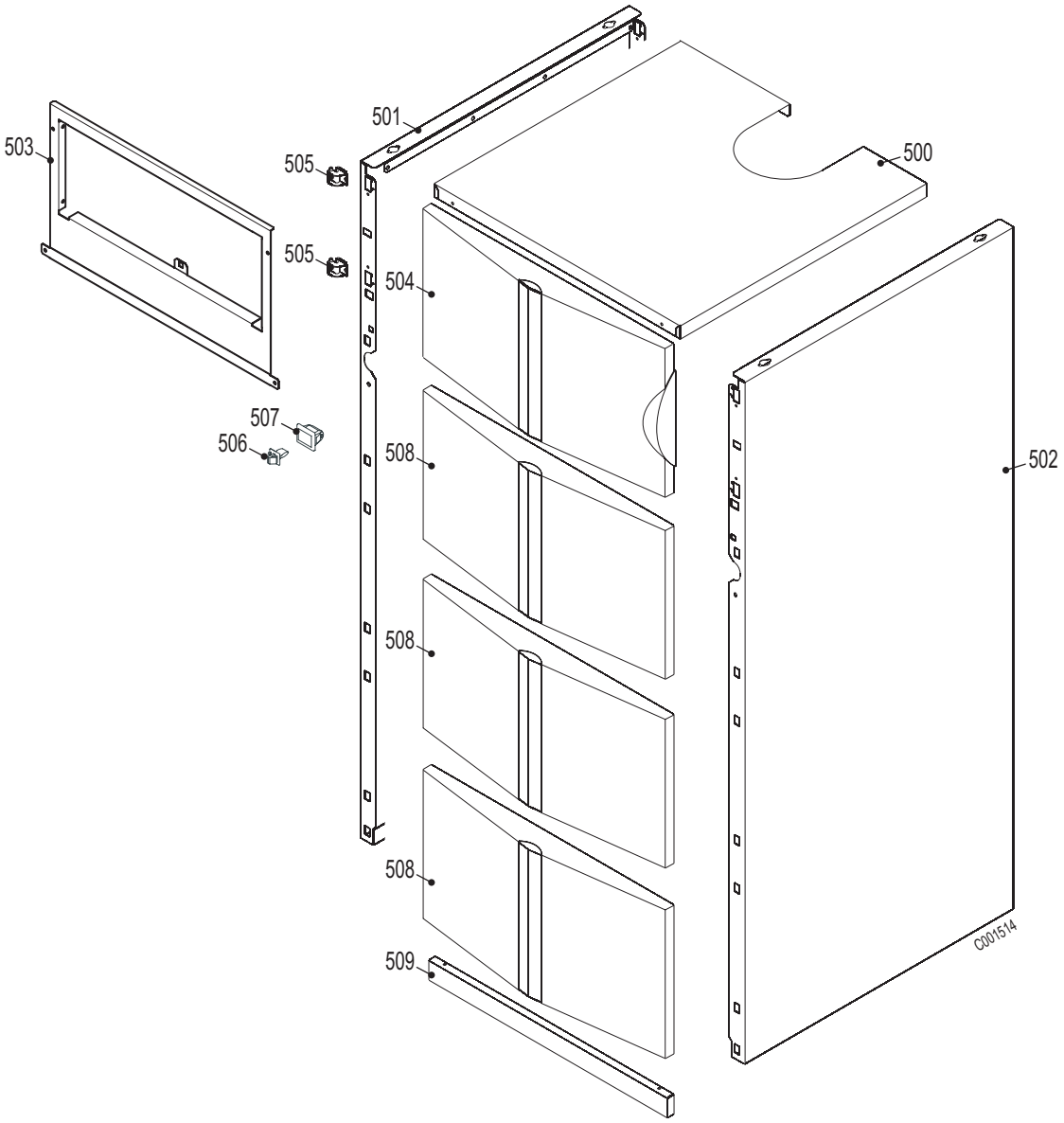

Mark.	Reference	Description
		Boiler body Gas 110 Eco 65
1	200010067	Complete sealed air box
2	S46850	one-way valve
3	S55994	Flue gas outlet pipe - diameter 100 mm
4	S57163	Measurement device cap
6	S54781	Complete adapter DN 100
7	200009361	Complete base frame
9	S62288	Pipe feed flue gas sensor
10	97860646	Adjustable foot M10x35
11	200009369	Complete box door
13	S44698	Temperature sensor ELMWOOD NTC
14	300013770	Water flow pipe
15	300012503	Return pipe
16	200002325	Boiler screw bag
17	S55924	Ignition cable
18	S59527	Ignition electrode + Ionization electrode + Gasket
19	S53489	Electrode gasket
20	S54822	Flame inspection window support
21	S53324	Heat exchanger
22	S45004	Flame inspection window diameter 32x32x3 mm + Gasket
23	S35458	Flame inspection window gasket
24	S53477	Exchanger inspection hatch + Gasket + Insulation
26	S54731	Exchanger inspection hatch insulation
27	S54754	Burner
28	S55915	Flue gas outlet gasket DN 100
31	300013105	Gasket box pipe
33	54798	Hinge pin
34	S59167	Fan MVLRG148/1200-3633 + Gaskets
35	S56151	Fan gasket / Exchanger
36	S57241	Exchanger inspection hatch gasket
37	S54777	Gasket Venturi-Fan
38	54766	Venturi
40	54768	Gas block seal / Venturi
41	S54771	O-ring 15.1x2.7
46	200009275	Card supports
47	200009276	Board guard
48	S54767	Gas valve VK125V1036B + Gaskets
49	S62185	Screw KB30x8
51	95320187	Cable clamp
52	54802	Display PCB
53	54794	Safety control box attachment
54	S59402	Safety box MCBA
57	57487	Control panel guard
58	57238	Air silencer

Mark.	Reference	Description
59	S43563	Fuse 2 AF (quick) 230 V MCBA
59	S14510	Fuse 4 AT (slow) 24 V MCBA
59	S6778	Fuse 6,3 AT (slow) Power supply
61	(95770696)	Screw SIM 3.9X25
62	300012504	Gas inlet pipe
63	200012052	Control panel front plate
63	59443	Control panel cover
63	56087	Box
64	300013121	TG330.70X5.51A manometer
66	S63316	AM3 board
68	S54800	Front panel
69	56940	Display PCB door
70	85000023	3/8 automatic air bleed valve
72	200010256	Gas valve cable
77	S54761	Siphon
78	300013190	Return connector 1"1/4
82	300013129	Sheeting 14,MCBA pts length 1650
83	52484	Cleaning tool
85	200002326	Seal bag
86	95800227	M5 nut
87	S21473	Brace for ignition electrode
88	S55409	Grommet
90	57475	Silencer attachment
91	200013781	Holding bracket
		Casing Gas 110 Eco 65
100	200009374	Complete top panel
101	200009367	Complete left panel
102	200009366	Complete right panel
103	200011864	Panel cover
104	300014192	Complete flap
105	300012374	Hinge
106	94820110	Catch
107	94820120	Pin
108	300014870	Complete front panel
109	200009378	Complete lower front panel
		Boiler body Gas 110 Eco 115
401	200010101	Complete sealed air box
402	S46850	one-way valve
403	S55994	Flue gas evacuation pipe diameter 100 mm
404	S57163	Measurement device cap
406	S54781	Complete adapter DN 150
407	200009361	Complete base frame
409	S62288	Pipe feed flue gas sensor
410	97860646	Adjustable foot M10x35
411	200009369	Complete box door

Mark.	Reference	Description
413	S44698	Temperature sensor ELMWOOD NTC
414	300013081	Heating flow pipe
415	300012503	Heating return pipe
416	200002325	Boiler screw bag
417	S55924	Ignition cable
418	S54339	Ignition electrode + Ionization electrode + Gasket
419	S53489	Electrode gasket
420	S54822	Flame inspection window support
421	S100196	Heating body
422	S45004	Flame inspection window + Gasket
423	S35458	Flame inspection window gasket
424	S53477	Exchanger inspection hatch + Gasket + Insulation
425	*S100082*	Diaphragm Natural gas H
426	S54731	Exchanger inspection hatch insulation
427	S57477	Burner
428	S55915	Flue gas outlet gasket DN100
429	S100053	Special screw M4x16
430	S100066	Gasket kit
431	300013105	Gasket box pipe
432	97550181	Neoprene gasket diameter 44x32x2 mm
433	54798	Hinge pin
434	S100036	Fan RG 148 1200-3633-010202
435	S56151	Fan gasket/Exchanger
436	S57241	Exchanger inspection hatch gasket
437	S100046	Gasket diameter 60 mm Venturi - Silencer
438	S100037	Venturi
440	S100059	O-ring 23.47x2.62
441	S100363	Gasket 33x2 Gas flange
442	95013074	Flat gasket diameter 30x21x2 mm
443	95013060	Green joint diameter 24x17x2 mm
444	S100364	Gas valve flange
445	97550196	Gasket 27x20x2.5
446	200009275	Card supports
447	200009276	Board guard
448	S100065	Gas valve VR 8615 VB 1002
449	S62185	Screw KB30x8
451	95320187	Cable clamps
452	54802	Display PCB
453	S54794	Safety control box attachment
454	S1000040	MCBA safety box
457	57487	Control panel guard
458	S100045	Air silencer
459	S6778	Fuse 6.3 AT (slow) Power supply
459	S14510	Fuse 4AT (slow) 24 V MCBA
459	S43563	Fuse 2 AF (quick) 230 V MCBA

Mark.	Reference	Description
461	95770696	Screw SIM 3.9X25
462	300013080	Gas inlet pipe
463	200012052	Control panel front plate
463	59443	Control panel cover
463	56087	Box
464	300013121	TG330.70x5.51A manometer
465	S57470	Siphon gasket
466	S14254	Screw Parker 4.2x9.5
466	S100049	Screw Parker 4.2x19
467	S59939	Front panel cover
468	S54800	Front panel
469	56940	Display PCB door
470	85000023	Automatic air bleed 3/8"
472	200010257	Gas valve cable
477	S100041	Complete siphon
478	300013190	Return connector 1"1/4
482	300013129	Sheeting 14,MCBA pts length 1650
483	58286	Cleaning tool
485	200002326	Seal bag
486	95800227	M5 nut
487	S21473	Brace for ignition electrode
488	S55409	Grommet
489	S51103	Leakproof seal
490	S100058	O-ring 70x3 Fan - Venturi
491	200013781	Holding bracket
492	S100215	Propane conversion kit
		Casing Gas 110 Eco 115
500	200009374	Complete top panel
501	200010105	Complete left panel
502	200010104	Complete right panel
503	200011864	Panel cover
504	300014192	Complete flap
505	300012374	Hinge
506	94820110	Catch
507	94820120	Pin
508	300014870	Complete front panel
509	200010107	Complete lower front panel

spares & parts online IBASIS.CO.UK

spares & parts online IBASIS.co.uk

spares & parts online IBASIS.co.uk

ISO 9001
depuis 1988

OpenTherm®
Communication System

CE

Broag Ltd.
Remeha House
Molly Millars Lane
RG41 2QP WOKINGHAM, Berks.
Tel: +44 118 9783434
Fax: +44 118 9786977
Internet: uk.remeha.com
E-mail: boilers@broag-remeha.com

© Copyright

All technical and technological information contained in these technical instructions, as well as any drawings and technical descriptions supplied, remain our property and shall not be multiplied without our prior consent in writing.

Subject to alterations.

26/01/2009

300014883-001-F

remeha